wemo

Mobile refrigeration
www.wemo.ch

51
years
since 1967

Cooling technology
for all usage
with battery power,
from 2018

50 years WEMO – 1967 till 2017

The electromechanical workshops of Werner Monhart were opened in his residence March 1st, 1967. He repaired all sorts of electrical appliances and household cooling devices. Later on, 12V cooling units were mainly repaired and suitable aggregates manufactured in return.
The first staff was hired in 1971. Together with his wife Edith, who is today by the way still daily in business, Werner Monhart built the business up. Edith Monhart celebrated her 76th birthday already this year, and remains the good soul of the WEMO-Devices AG Corporation.
Between 1972 and 1974 the parental barn was redeveloped into a warehouse and in 1975 it was expanded with an extension.
In April 1st, 1984 the barn burned down and more than 200 cooling devices fall prey to the flames.
In winter 1985/1986 the current building was created (see above). Thus the whole business was united under one roof.
In 1986 a production facility was established in Italy: The WEMO Italia S.R.L., which is mainly responsible for manufacturing fridge housing for different devices.
In 1992 the son Peter Monhart, born in 1967, came into business. As a skilled cooling systems installer with experience in industrial cooling system installation as well as practical experience in special devices installation, he brought along a great know-how.
Peter Monhart established in 1995 the WEMO cooling technology GmbH in the nearby Gottmadingen, in south Germany. From that location the care of German customers is carried out as well as the dispatch in all EU countries.
In 1997, on the occasion of the 30th year anniversary, the whole business was taken over by Peter Monhart.
In February 28th, 1998 the organization went down prey to great fire. The reconstruction of the Swiss Company site (see above) took much time and energy.
From 2002 till 2004, the Corporation developed the Trans Cooler.
This alternative to refrigerated vehicle becomes increasingly popular and so the WEMO devices AG was allowed in 2005 to equip the Swiss Army with transport refrigeration appliances.

Produkteübersicht

Drive from North – Stuttgart/ Munich

The journey from Stuttgart via the A81 freeway and from Lindau over the federal highway B31 over the Hegauer-Kreuz, continue on the A81 towards Schaffhausen. There are two tunnels: At first the Hohentwiel tunnel and then the Heilsberg tunnel. So you reach the highway end.

At the detour take the left towards Gottmadingen.
(2nd Exit)
Follow the road for 600 meters.

At the turnoff take the right towards Gaillingen.
Drive through Randegg towards Gaillingen.
Follow the road for 7.4 Km.

Now you reach Gaillingen, which you pass through and come in front of the Gaillingen custom office. Directly before that there is a branch off left, towards Diessenhofen. Follow the road for 1.3 Km.

You reach now the custom office “Gaillingen Bridge” and drive over the wooden bridge. After the bridge the Diessenhofen custom office is located (mostly unoccupied). Follow the road for 300 meters.

In Diessenhofen you drive right following the guide post “all directions”. Follow the road for 1.3 Km.

After the railway overpass you drive left towards Unterschlatt. Follow the road that leads through a forest for 3.5 Km.

You reach Unterschlatt.
300 meters after the village sign
you reach the destination.

Drive from South - Zurich/ St. Gallen

The journey from Zurich or St. Gallen takes place via the freeway A1 till Winterthur. Then via the motorway A4 towards Schaffhausen. Follow this motorway for 14 Km.

You reach the exit Truellikon where you leave the motorway A4.
Head towards Truellikon.
Follow the road for 2.8 Km.

In Truellikon you stay right towards Bassadingen.
Follow the road for 2 Km.

At the detour, drive left towards Schaffhausen (3rd Exit). Follow the road for 1.7 Km.

You reach Unterschlatt. 600 meters after the village sign, after the Volg shop, and the next street on your right respectively. Diessenhofen direction (Industry signpost WEMO).

Here in front of the old school house right towards Diessenhofen (Industry signpost WEMO).
Follow the road and reach us after approx. 200 meters.

Thermoelectric cooling units

In the year 1834, the French physicist Peltier (1785 – 1845) observed that the points of contact of two different metals, through which a direct current flows, either warm up or cool down, depending on the direction in which the current flows. At that time cooling was prior to everything a remarkable phenomenon, because heat generating with electric current was already known, cooling on the other hand was not.

For a long time the material pair Antimony/ Wismar was worthy as the most effective cooling combination. Nevertheless cooling was so negligible, that the Peltier effect could not be technically used for long time, although it was a very interesting discovery.

Only since approximately 55 years is cooling through Peltier effect usable, thanks to more suitable semiconductor materials factory that makes a better contact possible between the metal coaters.

Since about 30 years the Peltier elements (who will be also called thermoelectric elements) are being cost effectively produced, consisting of two semiconductors from which one is a negative and the other a positive conductor.
Another cost factor added is the complete production of cool boxes, refrigerators, can coolers, cooler bags, etc. in the Far East.

The advantages of thermoelectric:

- Orientation independent
- Compact method of construction
- Alternatively cooling or heating
- More favorable price

The disadvantages of thermoelectric:
- Very poor efficiency
  (Approximately 8 times worse than a compressor cooling system)
- Very high energy requirements for low power
- Poor insulation value of the Peltier elements at standstill

WEMO has no Peltier cooling units in the standard program as this cooling system has a very bad efficiency (see next page).
Instead of Peltier cooling aggregates, which are partially built up in boats, we offer a compressor cool aggregate 12VISDB32FE0.31 that can replace the existing Peltier aggregate without great expenditure (see page 77).

Functional principles of compressor cooling system on page 7.
Functional principles of absorption cooling system on page 77.

Functional principles of compressor cooling system

How a compressor cooling system functions had been of course studied once in school some time, likely yet forgot it again or never had true interest in it. The most important is first to understand what is cold or cooling. You must strike out of your mind these two terms to comprehend the whole thing: There is no cold! There is also no cold in a refrigerator, but only less heat! A cooling aggregate makes no cold, but it withdraws heat thus it is much less hot.

Heat is a form of energy. Any material and any solid stores energy: that is so called thermal energy or also molecular vibrational energy. All consists of molecules or atoms, the primal building blocks of any solid, and every molecule vibrates. The harder these molecules vibrate the warmer is the solid.

When a solid heats up, it gets larger because it expands itself: The molecules need more space to vibrate. If heated further, the molecules loose the hold under them and the structure of the solid falls apart. The solid substance will soften, become liquid and eventually gaseous (ex.: ice – water – steam). When the molecular vibrational energy reduces itself, the conjunction of molecules will be better again, the gaseous material will be liquid and at the end solid.

For example we get a dance floor and put 100 people on it. Every person represents a molecule. When the people sit on cool floor close to each other, this is a compact substance. Now we heat the dance floor up and the substance will be warm. The people start to move themselves and need the whole dance floor. Thus the substance has become liquid and the volume expanded itself. So the floor becomes more warm, people start to hop on, move themselves even harder and need even more space.

In a cooling system, the molecules of the refrigerant will be condensed through the compressor, so the molecular vibrational energy must be given. This takes place in the condenser (liquefier), the refrigerant being liquid. Refrigerant gets over the filter and capillary tube into the evaporator, through the pressure drop in capillary tube the molecules will be torn apart and given the idea of vibrating, however so that the molecules vibrate even more it needs heat. This heat will be deprived of the surroundings; consequently it is less warm in the evaporator and water freezes into ice.

Once more for example we get our dance floor, the 100 people have enough space to dance and hop. Hence they have plenty of energy, movement and vibration in themselves. Now we lock up all 100 people in one toilette: Here they can't dance anymore and they must give off their energy, movement and vibration. When we leave the persons once again on the dance floor they profit from the space again and continue dancing and hopping.

Deep freezing with 12-V power batteries

Deep freezing with 12 V: is that even possible? How to define deep freezing? Is 5°C already frozen or is a minimum of -18°C required as the law prescribes? Is a minimum power of -15°C enough for the transport? There is the biological point of view. This describes what a product actually requires:
Vegetables with high water content without fats, without sugar and without salts are frozen by -1°C. But if it is seasoned and mixed with salt the melting point strides to -4°C.
With fish the melting point lies by -2°C to -8°C. Here, the fat content above all determines the melting point.
For ice-cream the melting point (for iced water with no sugar) is at 0°C. Iced cream, however, requires a minimum of -15°C and a thick double iced cream from goat's milk is still creamy at -25°C.
In the medical field, the recommended storage temperature for blood plasma at -80 C. The transport temperature however is below -30°C.

The law prescribed the following specifications for food:
Frozen food can't be stored above -18°C.
The surface layers can be warmed up to maximum -15°C during transportation, except for the hour before consumption or further processing.
Warmed frozen food should not be refrozen. For storage and transport -25°C is recommended in order to comply with the minimum temperature during transshipment and transportation.

Most of the iceboxes are equipped with a cooling refrigerant, such as R134a, and reach up to -20°C. At high external temperatures such as those prevailing in a car parked in the sun in summer, compliance is hardly possible. With us freezer boxes are equipped with the frozen refrigerant R404a and therefore also with an extra compressor that is designed to meet these requirements.

The main problem is the power supply. There is barely a car manufacturer whose factory installed a decent in the trunk of a vehicle. What is now frequently found in the trunk is a cigarette lighter socket. Unfortunately this is not to be used for operating a refrigerator or a freezer box. The smooth operation of such devices needs a thick cable (4 to 6 cross-sections cable) to be installed directly from the battery in the trunk.
For a transCooler (page 99) at least 10 mm2 are required

Compressor Cool box WEMO B 20 P

Product description:
The WEMO B20P is a compressor cool box in a modern design with internal LED lights and seamlessly shaped inner tub, which is very easy to clean. Compact control panel with various setting options and a control range up to -18°C.

Technical specifications:

Capacity	20 Liters
Temperature range	-18°C to +10°C
Vehicle battery connector	12V 24 V
Power consumption +5°C/25°C	4,6 W/h
Power consumption +5°C/32°C	6,9 W/h
Power consumption +5°C/32°C	12,4 W/h
Power input	48 W
Electricity consumption at 12 V	4 A
Climate class	N
Weight	12,2 kg
1,5 Liter bottles H330	standing up no
External dimensions H x W x D	394 x 300 x 550

Article name	Special feature	Article N°	Euro CHF
WEMO B20P	12V 24 V DC 230 AC	103100	599.-
equipment:			
Replacement connection cable 12 24 V		103110	38.-
230 Volt cable with mains socket		103120	26.-

Compressor Cool box WEMO B 30 P

Product description:
The WEMO B30P is a compressor cool box in a modern design with internal LED lights and seamlessly shaped inner tub, which is very easy to clean. Compact control panel with various setting options and a control range up to -18°C.

Technical specifications:

Net capacity	28 Liters
Temperature range	18°C to +10°C
Vehicle battery connector	12V 24 V, optional 230 V
Power input	48 W
Electricity consumption at 12 V	4 A
Climate class	N
Weight	13.1 kg
1,5 Liter bottles H330	5 pieces standing up
External dimensions H x W x D	464 x 300 x 550

Article name	Special feature	Article N°	Euro CHF
WEMO B30P	12V 24VDC 230 AC	103200	619.-
equipment:			
Replacement connection cable 12V 24V		103110	38.-
230 Volt cable with mains socket		103120	26.-

Compressor Cool box WEMO B46S

Product description:
The WEMO B46S is a compressor cool box in a modern design with internal LED lights and seamlessly shaped inner tub, which is very easy to clean. Compact control panel with various setting options and a control range up to -18°C with a full automatic priority circuit at 230 V.

Technical specifications:

Net capacity	45 Liters
Temperature range	-18°C to +10°C
Vehicle battery connector	12V 24 V, optional 230 V
Power consumption +5°C/25°C	5,5 W/h
Power consumption +5°C/32°C	11.9 W/h
Power consumption +5°C/43°C	18,25 W/h
Power consumption -18°C/25°C	14.8 W/h
Power consumption -18°C/32°C	19.7 W/h
Power input	48 W
Electricity consumption at 12 V	4 A
Climate class	N
Weight	21 kg
1,5 Liter bottles H330	10 pieces
External dimensions H x W x D	490 x450 x 650

Article name	Special feature	Article N°	Euro CHF
WEMO B46S	12V 24VDC 230 AC	103300	775.-
WEMO B46GTA	12V 24VDC 230 AC	103310	1595.-

equipment:

Replacement connection cable 12V 24V	103110	38.-
230 Volt cable with mains socket	103120	26.-

Compressor Cool box WEMO B56 S

Product description:
The WEMO B56S is a simple well isolated compressor cool box which has a low voltage protection like all others.

Technical specifications:

Net capacity	55 Liters
Vehicle battery connector	12V 24V 230VAC
Standard temperature	+10°C to -18°C
Power consumption +5°C/25°C	6,5 W/h
Power consumption +5°C/32°C	13.2 W/h
Power consumption +5°C/43°C	19,9W/h
Power consumption -18°C/25°C	16.8 W/h
Power consumption -18°C/32°C	21.9 W/h
Maximum power input	70 W BD 35 F
Weight	22.5 kg
1,5 Liter bottles H330	10 pieces standing up
External dimensions W x L x H	690 x 450 x 550

Article name	Special feature	Article N°	Euro CHF
WEMO B56S	12V 24VDC 230 AC	103400	775.-
WEMO B56GTA	12 24 230 V to -30 ° C	103410	1595.-
equipment:			
Replacement connection cable 12V 24V		103110	38.-
230 Volt cable with mains socket		103120	26.-

Compressor Cool box WEMO B81S

Product description:
The WEMO B81S is a compressor cool box in a modern design with internal LED lights and seamlessly shaped inner tub, which is very easy to clean. Compact control panel with various setting options and a control range up to -18°C with a full automatic priority circuit at 230 V.

Technical specifications:

Net capacity	80 Liters
Temperature range	-18°C to +10°C
Vehicle battery connector	12V 24 V, 230 V
Power consumption +5°C/25°C	9.8 W/h
Power consumption +5°C/32°C	19.8 W/h
Power consumption +5°C/43°C	29.9 W/h
Power consumption -18°C/25°C	28.4 W/h
Power consumption -18°C/32°C	33.5 W/h
Power input	80 W
Electricity consumption at 12 V	4 A
Climate class	N
Weight	22.5 kg
1,5 Liter bottles H330	20 pieces
External dimensions H x W x D	520 x495 x 8250

Article name	Special feature	Article N°	Euro CHF
WEMO B81S	12V 24VDC 230 AC	103500	990.-
WEMO B81GTA	12 24 230V to -30°C	103510	1845.-

equipment:

Replacement connection cable 12V 24V	103110	38.-
230 Volt cable with mains socket	103120	26.-

Compressor Cool box WEMO 41

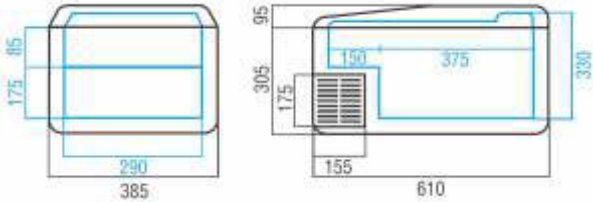

Display standard

Product description:
The WEMO 41 is made of one piece as the WEMO 26 (in rotation method). It is optionally equipped with a digital thermostat (Dig) and 230 V. The WEMO 41 GTA Is a freezer version with the compressor BD 80.

Technical specifications:

Net capacity	41 Liters
Vehicle battery connector	12/24 V, optional 230 V
Standard temperature	+10°C to -5°C
Power consumption +5°C/25°C	12,5 W/h
Power consumption +5°C/32°C	17,5 W/h
Maximum power input	70 W BD 35 F
Weight	22,5 kg
1,5 Liter bottles H330	3 pieces standing up
External dimensions W x L x H	385 x 610 x 409
Internal dimensions W x L x H	300 x 530 x 340/110

Article name	Special feature	Article N°	Euro	CHF
WEMO 41	12/24 V	107000-3	990.-	1089.-
WEMO 41 Dig	12/24 V	107500-3	1209.-	1330.-
WEMO 41 Dig A	12/24 230 V	107520-3	1262.-	1389.-
WEMO 41 GTA	12/24 230 V	107550-3	1409.-	1550.-
Wire basket, option		106510-3	30.-	33.-
Floor attachment, option		106513-1	21.-	23.-

Compressor Cool box and Deep Freezer WEMO 65

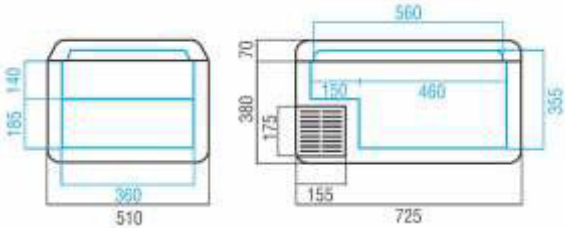

Display standard

Product description:
The WEMO 65 GTS is a very well insulated compressor cool box that reaches temperatures up to -30°C. For the power supply different voltages are possible. With the option H the box can also heat. This is important for transporting at room temperature (for example stem cells: +23 ° C). The package includes a vehicle connection kit to connect the car to it.

Technical specifications:

Net capacity	65 Liters
Vehicle battery connector	12/24 V
Connection option A	230 V AC, switchable to 110 V
Power consumption +5°C/25°C	7,3 W/h
Power consumption +5°C/32°C	11,7 W/h
Standard temperature	+10°C to -10°C
Temperature option GT	up to -25°C
Temperature option GTT	up to -35°C
Temperature option H	up to 30°C Heating
Weight	23,5 kg
1,5 Liter bottles H330	19 pieces
External dimensions W x L x H	510 x 750 x 460
Internal dimensions W x L x H	375 x 620 x 345

Article name	Special feature	Article N°	Euro CHF
WEMO 65 GT	12V 24V	109050	1720.-
WEMO 65 GTA	12V 24V 230 V	109550	1874.-
WEMO 65 GTTA	12V 24V 230 V -35°C	109650	4143.-
WEMO 65 GTAH	12V 24V 230 +30/-25°C	109660	2360.-
Data record, see page 109			
Wire basket, option		109015	32.-
Vehicle connection kit 65 for 2 cars		109551	98.-
Cigarette plug connector, option		109555	74.-

Door lock with ventilation position

Door lock in closed condition

Illustration with mounting frame
Integrated door

Door slightly open.
The entire lock can be changed to the other side of the door by changing the door stopper.

closing the door automatically locks the shutter and prevents the door from opening.

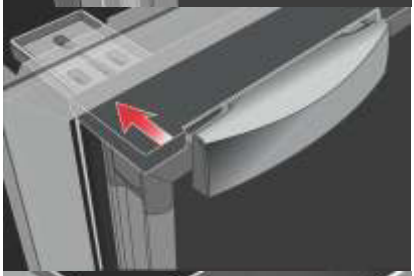

Pull on the handle of the door opens the latch

The ventilation position can be adjusted by moving the locking tab. The refrigerator is left open for about 1 cm and the refrigerator stays in the position when it is not needed to avoid odors

Compressor Fridge WEMO 200

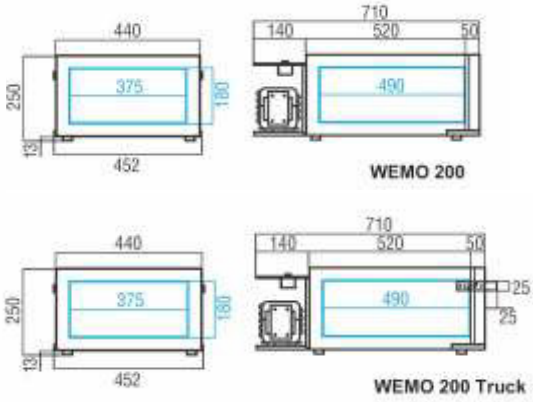

Product description:
The WEMO 200 is a compressor fridge, which was designed to fit under beds in truck cabs. The WEMO 200 Truck has a stable locking system which prevents the opening of the door when braking or when tilting the cab. When installed in a sailing ship, positioning it in the transverse axis of the bar is highly recommended.

Technical specifications:

Net capacity	26 Liters
Vehicle battery connector	12/24 V, optional 230 V
Standard temperature	+10°C to -5°C
Power consumption +5°C/25°C	8,6 W/h
Power consumption +5°C/32°C	12,4 W/h
Maximum input	70 W BD 35 F
Weight	18 kg
External dimensions W x D x H	440 x 720 x 250
Internal dimensions W x D x H	375 x 465 x 180
Aggregate W x L x H	150 x 280 x 180

Article name	Special feature	Article N°	Euro CHF
WEMO 200	12V 24 V	158000	1073.-
WEMO 200 truck	12V 24 V	158200	1090.-
WEMO 200 A	12V 24 230 V	158100	1218.-
WEMO 200 truckA	12V 24 230 V	158500	1336.-
Aggregate mounting bracket		592300	65.-
Couplings for conduit separation		581100	191.-
Drawer W200		158010	45.-

Compressor fridges

The shown fridges on the following pages all have the same features.
However the fridges are supplied with different cooling elements.
N Normal cooling element or normal evaporator: The circular evaporator serves as ice compartment (about -5°C). This is suitable for the storage of frozen food but not for the storage of ice cream.
S Storage: The S has a small ice compartment like the N. However with S there is a cooling storage disk (a eutectic) which saves cold above the melting point, which is at 0°C. If the refrigerator is switched off, the fridge cools down further and the storage disc or its contents thaw and deprive the fridge so the heat - in the refrigerator, is less warm. So the refrigerator does not require energy. But bear in mind that energy must be pumped in the storage before you can benefit from it. Overall a storage fridge needs more energy.
F is a flat evaporator at the rear wall or also rear wall evaporator: The ice compartment is eliminated. Accordingly more usable volume arises. The energy requirement is lower.

The inner housing is made of a piece of deep-drawn plastic; the shelves can be adjusted in height. Interior lighting is standard starting from 50 litres capacity.
The internal door shelves can be unhooked, adjusted and easily cleaned.

The door is equipped with a locking system so that it can't be opened during the drive. It could also be locked in a ventilation position, in order to prevent odour formation during the tool life.

The door decoration can be replaced when the lower door panel is removed. Each door is not sealed to the bar. The joint could be simply vice screwed. Accordingly doors could be opened from left or from right.

The fridges are equipped with an internal or external cooling aggregate. With internal aggregates the aggregate is not located in the fridge, but rather in the housing mass.
The external aggregate is combined with a 1.5 meter long conduit so it could be set up behind, below, above or beside the fridge. An external aggregate, as a rule, brings more space in the fridge, as the depth of the niche could be used better. It is recommended to screw the aggregate directly with an aggregate mounting bracket at the rear wall of the fridge as a back bag. With an oblique lift the aggregate could be set up above and the place will be used optimally. Or you choose a fridge with refrigerant couplings; this way the aggregate could also be placed in the alongside room. Up to 10 meters of conduit are available.

Compressor Fridge 46

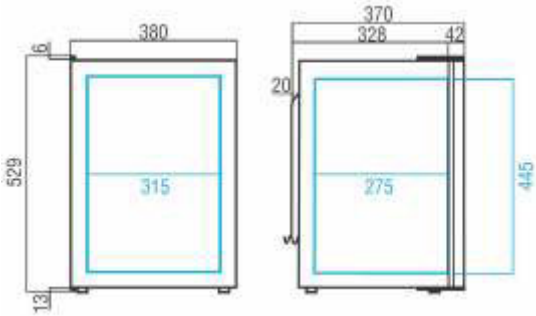

Product description:
The WEMO 46 is a much used fridge model, whether in boats - or caravans' field. The WEMO 46 with a flat evaporator, without freezer, provides much useful volume and 2-liter bottles can be accommodated standing without any problem.

Technische Daten:

Net capacity	42 Liters
Vehicle battery connector	12V 24 V, optional 230 V
Standard temperature	+10°C to -5°C
Power consumption +5°C/25°C	8,75 W/h
Power consumption +5°C/32°C	12,4 W/h
Maximum input	70 Watt BD 35 F
Weight	14,9 kg
External dimensions W x D x H	380 x 370 x 530
Internal dimensions W x D x H	315 x 275 x 445
cooling unit W x L x H	150 x 280 x 180

Article name	Special feature	Article N°	EuroCHF
WEMO 46 N	12/24 V	138000	964.-
Options:			
F flat evaporator without ice compartment		141000	85.-
A with priority circuit 230V		103502	120.-
KU for line separation		581100	198.-
LL Longest cooling line		581110	189.-
Equipment:			
Aggregate mounting bracket		592300	65.-
Couplings of duct separation		581100	191.-
Mounting frame 46 Integrated		138017	95.-

Compressor Fridge 51

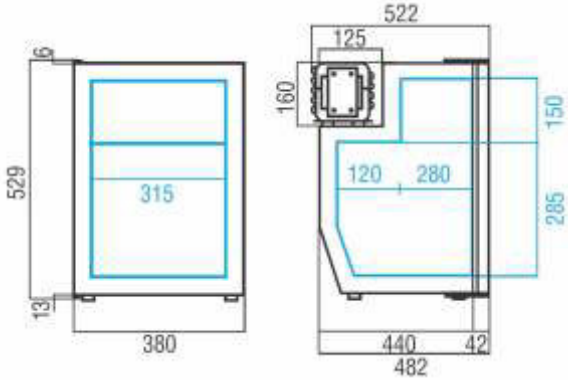

Product description:
The WEMO 51 has the same width and height as the WEMO 46. However it is much deeper and consequently disposes of 9 liters more in capacity. This dimension is very common in US-boats as well as boats that come from Scandinavia.

Technical specifications:

Net capacity	51 Liters
Vehicle battery connector	12/24 V, optional 230 V
Standard temperature	+10°C to -5°C
Power consumption +5°C/25°C	7,1 W/h
Power consumption +5°C/32°C	11,9 W/h
Maximum input	70 W BD 35 F
Weight	18 kg
External dimensions W x D x H	380 x 522 x 530
Internal dimensions W x D x H	315 x 400 x 435

Article name	Special feature	Article N°	Euro CHF
WEMO 51 N	12V 24 V	157300	1109.-
Options:			
A with priority circuit 230V		103502	120.-
Equipment:			
Mounting frame 51 Integrated		138017	95.-

Compressor Fridge 62

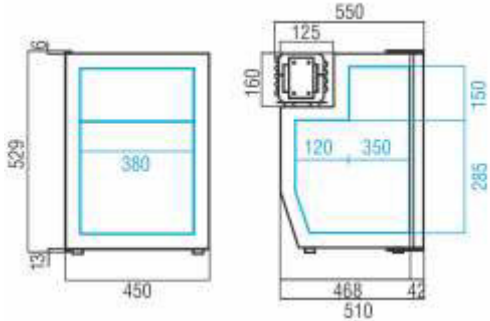

Product description:
The WEMO 62 is a compressor fridge mainly designed for the installation in boats. The dimension is very common in American and Scandinavian boats. A 1.5 liter bottle can be put into the depth.

Technical specifications:

Net capacity	62 Liters
Vehicle battery connector	12/24 V, optional 230 V
Standard temperature	+10°C to -5°C
Power consumption +5°C/25°C	10,3 W/h
Power consumption +5°C/32°C	13,8 W/h
Maximum input	70 W
Weight	18 kg
External dimensions W x D x H	450 x 550 x 530
Internal dimensions W x D x H	370 x 470 x 300

Article name	Special feature	Article N°	Euro CHF
WEMO 62 N	12V 24 V	157000	1145.-
Options:			
A with priority circuit 240V		103502	120.-
Equipment:			
Mounting frame 62 Integrated		157017	97.-

Compressor Fridge 47 Truck

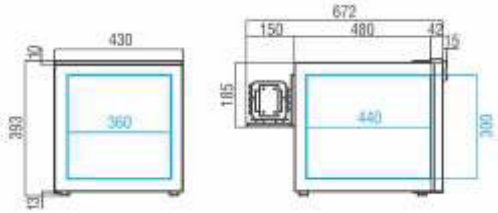

Product description:
The WEMO 47 Truck was originally designed for the installation in truck cabins, yet it is equally well suited for boats and mobile homes because it can be installed under a bench. The cooling aggregate is mounted at the back. Optionally, a 1.5-meter conduit is supplied (ex) or with medium cooler couplings (KU). Here is the conduit in 1.5 meter long, even longer on request.

Technical specifications:

Net capacity	47 Liters
Vehicle battery connector	12/24 V, optional 230 V
Standard temperature	+10°C to -5°C
Power consumption +5°C/25°C	8,5 W/h
Power consumption +5°C/32°C	12,7 W/h
Maximum input	70 W BD 35 F
Weight	20 kg
External dimensions W x D x H	430 x 510 x 393
Internal dimensions W x D x H	360 x 430 x 300
external cooling unit W x L x H	150 x 280 x 180

Article name	Special feature	Article N°	Euro	CHF
WEMO 47 Truck	12 V 24 V	158400	1091.-	

Options:

A with priority circuit 230V	103502	120.-	
KU for line separation	581100	198.-	
LL Longest cooling line	581110	189.-	

Compressor Fridge 66

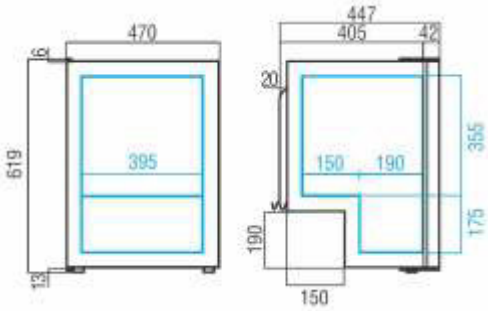

Product description:
The WEMO 66 is a well isolated compressor fridge and is useful for solar units, boats and caravans. It is also employed to some extent in truck cabins. Internal LED lightning is standard.
Type variations: see page 18.

Technical specifications:

Net capacity	60 Liters
Vehicle battery connector	12/24 V, optional 230 V
Standard temperature	+10°C to -5°C
Power consumption +5°C/25°C	10,25 W/h
Power consumption +5°C/32°C	6,25 W/h
Maximum input	70 W BD 35 F
Weight	18,9 kg
External dimensions W x D x H	470 x 460 x 615
Internal dimensions W x D x H	395 x 190/340 x 400

Mounting frame option:
rotating on 3 sides
Angle profile

Article name	Special feature	Article N°	Euro CHF
WEMO 66 N	12V 24 V	142000	1073.-
Options:			
F flat evaporator without ice compartment		141000	85.-
S Holding Plate / PCM- Battery		144000	140.-
A with priority circuit 230V		103502	120.-
Equipment:			
Mounting frame 66 Integrated		142017	102.-

Compressor Fridge 76

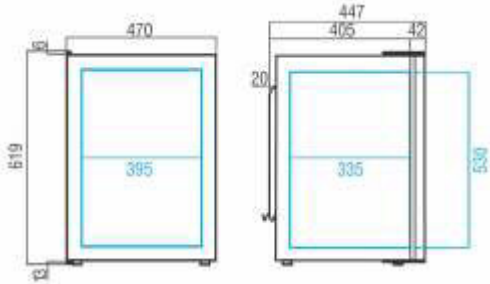

Product description:
The WEMO 76 has the same measurements as the 66, but offers 15 litres more in capacity. During installation the external cooling aggregate can be set up in order to be much better ventilated. Thus the aggregate and its exhaust heat are not in the niche which would be warmed up by it. This way, the niche has extra insulation and the energy demand is lower.

Technical specifications:

Net capacity	75 Liters
Vehicle battery connector	12/24 V, optional 230 V
Standard temperature	+10°C to -5°C
Power consumption +5°C/25°C	10,25 W/h
Power consumption +5°C/32°C	16,42 W/h
Maximum input	70 W BD 35 F
Weight	21,8 kg
External dimensions W x D x H	470 x 450 x 620
Internal dimensions W x D x H	390 x 335 x 530
external cooling unitW x L x H	150 x 280 x 180

Article name	**Special feature**	**Article N°**	**Euro CHF**
WEMO 76 N	12V 24 V	146000	1050.-
Options:			
F flat evaporator without ice compartment		141000	85.-
S Holding Plate / PCM- Battery		144000	140.-
A with priority circuit 230V		103502	120.-
KU for line separation		581100	198.-
LL Longest cooling line		581110	189.-
Equipment:			
Aggregate mounting bracket		592300	65.-
Couplings of duct separation		581100	191.-
Mounting frame 76 Integrated		142017	105.-

Compressor Fridge 96

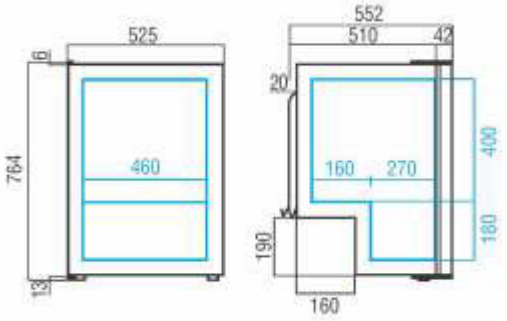

Product description:
The WEMO 96 that comes in the masses of an absorber fridge (page 120), as it is installed in caravans, is the ideal supplement to solar systems. It has all the advantages of the compressor cooling.
Type variations: see page 18.

Technical specifications:

Net capacity	118 Liters
Vehicle battery connector	12V 24 V, optional 230 V
Standard temperature	+10°C to -5°C
Power consumption +5°C/25°C	15,2 W/h
Power consumption +5°C/32°C	22,9 W/h
Maximum input	70 W
Weight	26 kg
External dimensions W x D x H	525 x 555 x 765
Internal dimensions W x D x H	460 x 430 x 580

Article name	Special feature	Article N°	Euro CHF
WEMO 96 N	12V 24 V	150000	1345.-
Options:			
S Holding Plate / PCM- Battery		144000	140.-
A with priority circuit 230V		103502	120.-
Equipment:			
Mounting frame 96 Integrated		150017	109.-

Compressor Fridge 106

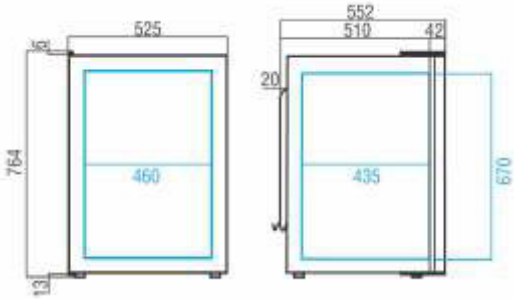

Product description:
The WEMO 106 has identical measurements as the 96; nevertheless it is supplied with an external aggregate.
Type variations: see page 18.

Technical specifications:

Net capacity	133 Liters
Vehicle battery connector	12/24 V, optional 230 V
Standard temperature	+10°C to -5°C
Power consumption +5°C/25°C	12 W/h
Power consumption +5°C/32°C	21,16 W/h
Maximum input	70 W
Weight	26 kg
External dimensions W x D x H	525 x 550 x 765
Internal dimensions W x D x H	460 x 435 x 670
external cooling unit W x L x H	150 x 280 x 180

Article name	Special feature	Article N°	Euro CHF
WEMO 106 N	12V 24 V	154000	1363.-
Options:			
F flat evaporator without ice compartment		141000	85.-
S Holding Plate / PCM- Battery		144000	140.-
A with priority circuit 230V		103502	120.-
KU for line separation		581100	198.-
LL Longest cooling line		581110	189.-
Equipment:			
Aggregate mounting bracket		592300	65.-
Couplings of duct separation		581100	191.-
Mounting frame 106 Integrated		154017	109.-

Compressor Fridge 85

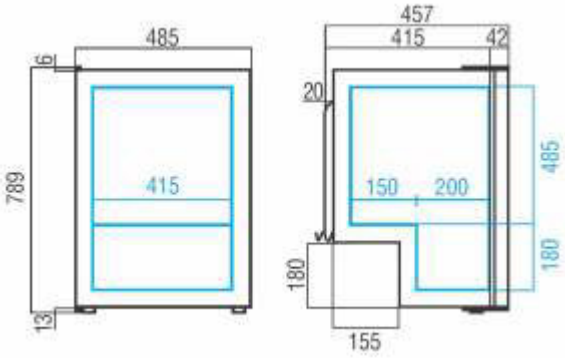

Product description:
The WEMO 85 is the successor model of the WEMO 900. It is as high as the 96/106 yet comes with the width of the 66/76.

Technical specifications:

Net capacity	90 Liters
Vehicle battery connector	12/24 V, optional 230 V
Standard temperature	+10°C to -5°C
Power consumption +5°C/25°C	12,75 W/h
Power consumption +5°C/32°C	25,8 W/h
Maximum input	70 W
Weight	26 kg
External dimensions W x D x H	485 x 460 x 790
Internal dimensions W x D x H	415 x 350 x 665

Article name	Special feature	Article N°	Euro CHF
WEMO 85 N	12V 24V	181000	1291.-
Options:			
A with priority circuit 230V		103502	120.-
Equipment:			
Mounting frame 85 Integrated		181017	105.-

Compressor Fridge 1500

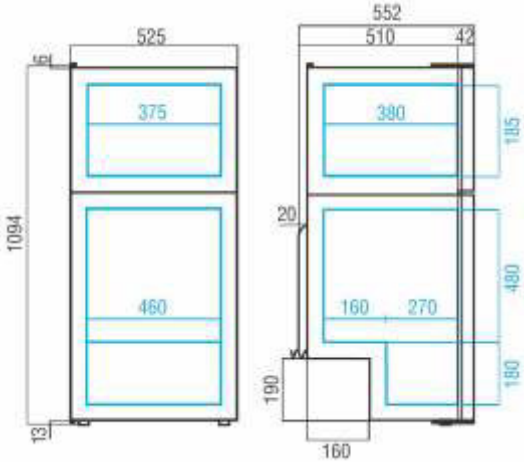

Product description:
The WEMO 1500 is made of two housings: from the WEMO 96 F and from the freezer 30GS. However, it is operated only by a compressor.

Technical specifications:

Net capacity	150 Liters
Freezing compartment	30 Liters ** (-12°C)
Vehicle battery connector	12/24 V, optional 230 V
Standard temperature	+10°C to -5°C
Power consumption +5°C/25°C	19,5 W/h
Power consumption +5°C/32°C	36,4 W/h
Maximum input	70 W
Weight	38,8 kg
External dimensions W x D x H	525 x 550 x 1094
Internal measurements of the freezer	380 x 380 x 190

Article name	Special feature	Article N°	Euro CHF
WEMO 1500 N	12/24 V	183000	2118.-
WEMO 1500 NA	12/24/230 V	183100	2263.-

Compressor Fridge 2600

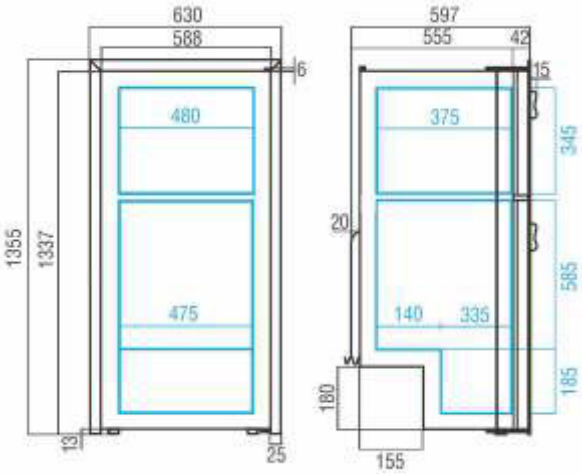

Product description:
The WEMO 2600 is unsurpassed with its net volume. It finds its place in big yachts and caravans as a built-in refrigerator. It is supplied with a black installation frame. The door leaf is exchangeable.

Technical specifications:

Net capacity	230 Liters
Freezing compartment	60 Liters ** (-12°C)
Vehicle battery connector	12V 24 V, optional 230 V
Standard temperature	+10°C to -5°C
Power consumption +5°C/25°C	28 W/h
Power consumption +5°C/32°C	42 W/h
Maximum input	85 W BD 50 F
Weight	64 kg
External dimensions W x D x H	590 x 600 x 1340 American
Internal measurements of the freezer	475 x 380 x 345

Article name	Special feature	Article N°	Euro CHF
WEMO 2600 N	12/24 V	184000	2177.-
WEMO 2600 NA	12/24/230 V	184100	2323.-

Solar systems, Photovoltaic-Systems

WEMO is not a classical solar systems specialist since we do not install neither sell solar systems. We build since over 30 years solar cooling units. Again and again we are confronted with solar systems, from which the refrigerator draws too much energy. Then the refrigerator is always to blame because it draws the battery empty - but usually its services are mixed up.

There are for example: two solar panels connected in series to 50 W. So 100 W results then in 24 V.

Or daily performances will be mistaken with power rates Wp.

So from the solar cells over 10 meters of cable will be placed up to the regulator. As it is a matter of 12 V, 1mm2 wires will be used.

For example in a mountain hut that is visited in good weather by up to 100 visitors, or a doctor anywhere in Africa who stores medicines in a refrigerator. Then a beer crate came, which stood in the sun by 50°C in the refrigerator. The refrigerator drew out the battery empty for inexplicable reasons.

The campers with their great mobile home and a super solar system on the roof; after four full days in sunlight in Spain the battery runs empty. If they would have put the mobile home under beautiful large trees where it won't be that hot inside the mobile home, the refrigerator would have needed less current.

There was also the garden plot owner who has in his cooling extension a refrigerator standing extra – which always needs too much current: However, at a beautiful July afternoon, the tin roof has more than 80°C over the refrigerator and the room can be rather described as a cool sauna than as a cooling extension.

Or the garden plot owner by whom the solar system over years impeccably functions. But a bit disturbing is the construction site of an overbuilding immediately to the south.

Still many examples could be enumerated here, partially so serious but also those to smile about.

Solar fridges and solar systems

The concept of solar fridges is so misleading because solar fridges are not fed with sun energy but with electrical energy, which is generated through solar systems.
As the most of small systems do not feed from the public networks und save their energy in a battery, these would be designed for a main voltage of 12 V or 24 V. This is also called an isolated facility. So the refrigerator will operate from 12 V power batteries.
With those isolated solutions an over-consumption or bad weather is immediately noticeable because the battery capacity is mostly designed only for one or two days. If there is a refrigerator that needs much energy, then the solar system must be upgraded. Here it is recommended to use only a compressor fridge because the absorbers could be also working with gas, but require then by 12 V about 5 times more energy than a compressor fridge. This also applies to mobile homes, as a mobile home is also a small island; and here it is also worthwhile then to replace the existing absorber fridges with compressor fridges, when sun energy is being used.
On the following pages we introduce compressor fridges, which we manufacture from household refrigerator units. We redeem the housings and we finish building them at 12 V/ 24 V.
You think: Why then go complicated, when I use a household fridge it costs less and it has a power consumption of 50 W to 120 W. After all I can buy an inverter with 200 W for 150 Franks or 140 Euro and then run the unit this way. We have in average a caller every two weeks who complains that it doesn't function – and partially also in a very aggressive tone. We then explain to him that he should buy an inverter with Sinus-output; with minimum 1000 W power, obtainable for about 1200 Franks or 1000 Euro. A few of these persons then hang up uncomprehending and insulting on the phone, without saying good-bye.
For the functioning of household compressors: As you may know, a motor needs during the start up a launching current that is around 8 times higher than the working current. But the household compressor has also a launch winding, which is up to 4 times larger than the run winding. Will 230 V be affiliated to the compressor- or better said, to the starter relay, both windings of the compressors will be fed with current. At that moment is the winding up to 5 times larger than the operation one, throughout the launch moment the peak is once more than 8 times larger. Consequently the launch peak of the compressor is up 40 times larger than the operational current. The compressor running the launch winding will be turned off through the starter relay. This was the description of a LST (Low Start) compressor. There are also HST (High Start) compressors, these compressors are also supplied with start condensers and can start off against the pressure in cooling systems, too. Here the peak can go even higher. Even when an inverter with 1000 W or more is being used, the power loss remains as the efficiency is given by optimal utilization and not at 5% till 10 % of the load.

Compressor Fridge WEMO WL 91

Product description:
The WEMO WL 91 is a cooler with no freezer. It is mainly used in the solar field. The solar system should require about 120 W to 150 W of solar power. Thus it is sufficient in the summer months, but for the winter months it is not enough.

Technical specifications:

Net capacity	99 Liters
Vehicle battery connector	12V 24 V, optional 230 V
Power consumption +5°C/+25°C	11,2 W/h
Power consumption +5°C/+32°C	20,2 W/h
Power consumption DIN	15 W/h
Compressor Danfoss	BD 35F
Electricity consumption at 12 V	5,85 A
Unpacked weight	25,5 kg
Mass W x D x H	505 x 490 x 840

Article name	Special feature	Article N°	Euro CHF
WEMO WL 91	12V 24V	216450	1177.-

Options:

A with priority circuit 230V	103502	120.-

Compressor Fridge WEMO WL 152

Product description:
The WEMO WL 152 is a cooler with no freezer. It is mainly used in the solar field, for example in garden plots or mountain huts which are operated by solar energy. The solar system should have a capacity of approximately 150 W.

Technical specifications:

Net capacity	134 Liters
Vehicle battery connector	12V 24 V, optional 230 V
Power consumption +5°C/+25°C	14,7 W/h
Power consumption +5°C/+32°C	27,3 W/h
Power consumption DIN	16,6 W/h
Compressor Danfoss	BD 35F
Electricity consumption at 12 V	5,85 A
Unpacked weight	28,3 kg
Mass W x D x H	545 x 611 x 850

Article name	Special feature	Article N°	Euro CHF
WEMO WL 152	12V 24V	216650	1200.-

Options:

A with priority circuit 230V	103502	120.-

Compressor Fridge WEMO WL 160

Product description:
The WEMO WL 160 is equipped with a full freezer up to -18°C. However, it should be noticed that it is an N class appliance. Thus, the -18°C are no longer guaranteed in the freezer at a +15°C ambient temperature. It is mainly used in the solar field. The solar system should have at least 150 W of solar nominal power.

Technical specifications:

Net capacity	126 Liters
Freezer	17 Liters
Vehicle battery connector	12V 24 V, optional 230 V
Power consumption +5°C/+25°C	16,2 W/h
Power consumption +5°C/+32°C	29,2 W/h
Power consumption DIN	23,5 W/h
Input	70 W
Compressor Danfoss	BD 35F
Climate class	N
Unpacked weight	36 kg
Mass W x D x H	580 x 600 x 850

Article name	Special feature	Article N°	Euro CHF
WEMO WL 160	12V 24 V	216700	1318.-

Options:

A with priority circuit 230V	103502	120.-

Solar Fridge WEMO WL 270

Product description:
The WEMO WL 270 is equipped with a full freezer up to -18°C. However, it should be noticed that it is an N class appliance. Thus, the -18°C are no longer guaranteed in the freezer at a +15°C ambient temperature. It is mainly used in the solar field.
The solar system should have at least 200 W of solar nominal power.

Technical specifications: WL270

Net capacity	276 Liters
Freezer	41 Liters
Vehicle battery connector	12V 24 V, optional 230 V
Power consumption +5°C/+25°C	19,3 W/h
Power consumption +5°C/+32°C	37.8 W/h
Power consumption DIN	30,4 W/h
Input	90 W
Compressor Danfoss	BD 100 CN
Climate class	N
Unpacked weight	53 kg
Mass W x D x H	555 x 580 x 1430

Article name	Special feature	Article N°	Euro CHF
WEMO WL 270	12V 24V	216750	1618.-
Options:			
A with priority circuit 230V		103502	120.-

Solar Fridge WEMO WL 73 P

Product description:
The WEMO WL 73 P is made of a deep freezer casing, but it can be operated as a refrigerator (+5°C).
It saves a lot of energy thanks to the top insulation of 75 mm and is therefore ideal as a storage refrigerator for solar operation. Due to the individual drawers, the cold air loss is very low. The solar power capacity is about 80 watts.

Technical specifications:

Net capacity	73 Liters
Vehicle battery connector	12V 24 V, optional 230 V
Power consumption +5°C/+25°C	6,8 W/h
Power consumption +5°C/+32°C	9,25 W/h
Power consumption +5°C/+43°C	14,5 W/h
Power consumption DIN	9.79 W/h
Input	90 W
Compressor Danfoss	BD 35F
Temperature range	+10°C to -5°C
Weight	34 kg
Mass W x D x H	500 x 560 x 850
Depth with open door	1010

Article name	Special feature	Article N°	Euro CHF
WEMO WL 73 P	12V 24 V +5°C	216820	1245.-
WEMO WL 73 GS	12V 24 V +5°C	216826	1345.-

GS = Freezer (-18°C)P = With implement (Refrigeration temperature +5°C)

Options:

A with priority circuit 230V	103502	120.-

Solar Chest Freezer WEMO WL 261

Product description:
The WEMO WL 261 is a chest freezer; it is used in the solar field, for example in garden plots or mountain huts which are operated by solar energy. The solar system should have a capacity of approximately 80 W

Technical specifications:	**WL 261 P**	**WL 261 GT**
Net capacity	183 Liters	183 Liters
Vehicle battery connector	12V 24 Volt	12V 24 Volt
Power consumption +5°C/+25°C	6,9 W/h	16,8 W/h
Power consumption +5°C/+32°C	8,4 W/h	18,9 W/h
Power consumption +5°C/+43°C	14,2 W/h	29,8 W/h
Power consumption DIN	10 W/h	23,5 W/h
Input	70 W	70 W
Compressor Danfoss	BD 35 K	BD 50 K
Electricity consumption at 12 V	4,35 A	5,85 A
Unpacked weight	41 kg	41 kg
Mass W x D x H	865 x 560 x 860	865 x 560 x 860

Article name	**Special feature**	**Article N°**	**Euro CHF**
WEMO WL 261 P	12V 24V	216900	1472.-
WEMO WL 261 GT	12V 24V	216950	1500.-

GT = Chest Freezer -18°C P = With implement +5°C

Options:

A with priority circuit 230V	103502	120.-

Compressor Fridge WEMO FKS 1800

Product description:
The WEMO FKS 1800 is a bottle fridge for mobile sales vehicles or delivery vehicles, which carry small amounts of refrigerated goods. The stable gratings are designed to carry loads up to 50 kg.

Technical specifications:

Net capacity	180 Liters
Vehicle battery connector	12V 24 Volt, optional 230 V
Power consumption DIN	37,5 W/h
Input	70 W
Compressor Danfoss	BD 100 CN
Unpacked weight	27,5 kg
Mass W x D x H	602 x 600 x 850

Article name	Special feature	Article N°	Euro CHF
WEMO FKS 1800	12V 24 V	215100	2115.-

Options:

A with priority circuit 230V	103502	120.-

Compressor Fridge WEMO FKS 2600

Product description:
The WEMO FKS 2600 is like the FKS 1800 also more likely to be found in sales vehicles - but also in kitchens of mountain restaurants; overnight it only needs 12 V/24 V supply voltage and during the day for example it is powered by a 230 V generator.

Technical specifications:

Net capacity	260 Liters
Vehicle battery connector	12V 24V, optional 230 V
Power consumption DIN	41,6 W/h
Input	120 W
Compressor Danfoss	BD 100 CN
Unpacked weight	42 kg
Mass W x D x H	602 x 600 x 1215

Article name	Special feature	Article N°	Euro CHF
WEMO FKS 2600	12V 24V	215300-3	2545.-

Options:

A with priority circuit 230V	103502	120.-

Compressor Fridge WEMO FKS 5440

Product description:
The WEMO FKS 5440 is our biggest fridge in the standard program. We are able to manufacture any kind of commercial gastronorm refrigerators, refrigerated, saladette and pizza stations at 12V. Currently the largest device of our production has 3400 liters capacity, is used in cold storage and is powered by 12 volt battery power.

Technical specifications:

Net capacity	540 Liters
Vehicle battery connector	12V 24 V,
Power consumption DIN	56 W/h
Input	120 W
Compressor Danfoss	BD 100 CN
Door lock with key	Standard
Unpacked weight	69 kg
Mass W x D x H	755 x 735 x 1640

Article name	Special feature	Article N°	Euro CHF
WEMO FKS 5000	12/24 V	215700	2962.-

Options:

A with priority circuit 230V	103502	120.-

Compressor Deep Freezer GS 5216

Product description:
The WEMO GS 5216 is a deep freezer. It is widely used in refrigeration trucks for additional transportation of frozen products. It fits also all European vans or GN sleepers.

Technical specifications:

Net capacity	513 Liters
Vehicle battery connector	12 Volt, 24 Volt
Temperature range	-15°C to -25°C
with digital thermostat	+20°C to -25°C
Power consumption DIN	104 W/h
Input	120 W
Compressor Danfoss	BD 200 CN
Unpacked weight	78 kg
Mass W x D x H	752 x 750 x 1725

Article name	Special feature	Article N°	Euro CHF
GS 5216 12V	12 Volt	216200	3748.-
GS 5216 24V	24 Volt	216210	3748.-

Compressor Chest Freezer WEMO GT 2356

Product description:
The WEMO GTS 2356 is the best in energy consumption with 130 mm insulation. It is preferably employed in the cooling region. It has optimal power consumption. Thanks to the Digital Thermostat (Dig) cooling and freezing is possible. It is also more and more used in drug services courier vehicles.

Option (Dig)
Display Digital

Technical specifications:

Net capacity	200 Liters
Vehicle battery connector	12V 24 V, optional 230 V
Temperature range	-15°C to -25°C
with digital thermostat	+20°C to -25°C
Power consumption +5/+25°C	6.9 W/h
Power consumption DIN	13.6 W/h
Input	70 W
Compressor Danfoss	BD 35K
Unpacked weight	46,5 kg
Mass W x D x H	1132 x 760 x 919

Article name	Special feature	Article N°	Euro CHF
GT 2356	12V 24V	215400	1904.-
Options:			
A with priority circuit 230V		103502	120.-
Dig digital display		103501	120.-

Compressor Chest Deep Freezer WEMO GT 2756

Product description:
The WEMO GTS 2756 is a well-proven chest deep freezer for autonomous solar operation - thanks to the robust full metal housing and the 130 mm thick insulation. With the digital thermostat it can also be operated as a chest freezer, and has a power consumption of about 10 W. So it can be operated with a 100 watt solar panel.

Option (Dig)
Display Digital

Technical specifications:	**GT 2756**
Net capacity	240 Liters
Vehicle battery connector	12V 24 V, optional 230 V
Temperature range	-15°C to -25°C
with digital thermostat	+20°C to -25°C
Power consumption +5/+25°C	7.8 W/h
Power consumption DIN	14.8 W/h
Input	70 W
Compressor Danfoss	BD 35 K
Unpacked weight	61 kg
Mass W x D x H	1288 x 760 x 919

Article name	**Special feature**	**Article N°**	**Euro CHF**
GT 2756	12V 24 V	218300	2150.-
Options:			
A with priority circuit 230V		103502	120.-
Dig digital display		103501	120.-

Compressor Chest Deep Freezer WEMO GT 3656

Product description:
The WEMO GTS 3656 is a well-proven chest deep freezer for autonomous solar operation - thanks to the robust full metal housing and the 130 mm thick insulation. With the digital thermostat it can also be operated as a chest freezer, and has a power consumption of about 10 W.

Option (Dig)
Display Digital

Technical specifications:	**GT 3656**
Net capacity	331 Liters
Vehicle battery connector	12V 24 V, optional 230 V
Temperature range	-15°C to -25°C
with digital thermostat	+20°C to -25°C
Power consumption DIN	17.7 W/h
Input	70 W
Compressor Danfoss	BD 50 K
Unpacked weight	72 kg
Mass W x D x H	1373 x 808 x 919

Article name	**Special feature**	**Article N°**	**Euro CHF**
GT 3656	12V 24V	218200	2338.-
Options:			
A with priority circuit 230V		103502	120.-
Dig digital display		103501	120.-

Ice-cream Chest WEMO GTE 2500

Product description:
The WEMO GTE 2500 is a mobile Ice-cream chest, mounted for example on a bicycle or in a merchandising vehicle; it is used for mobile Ice-cream selling. In the machine compartment can even be accommodated a battery and a charger. So the battery can be charged overnight and then work autonomously for about 8 hours.

Technical specifications:

Net capacity	216 Liters
Vehicle battery connector	12V 24 V, optional 230 V
Power consumption DIN	16.6 W/h
Input	120 W
Compressor Danfoss	BD 80
Unpacked weight	44 kg
Mass W x D x H	835 x 661 x 916

Article name	Special feature	Article N°	Euro CHF
WEMO GTE 2500	12V 24V	215800	2390.-

Options:

A with priority circuit 230V	103502	120.-
Dig digital display	103501	120.-
Bike with integrated battery 80 Ah and charger for a self-sufficient application, e.g. on a bike	103518	480.-

Ice-cream Chest WEMO GTE 3300

Option (Dig)
Display Digital

Product description:
The WEMO GTE 3300 can be used in mobile sales field as well as in the logistics sector. The advantage compared to a normal chest is the sliding cover, which does not need space to open up. With the digital thermostat it can also be operated in the cooling field.

Technical specifications:

Net capacity	291 Liters
Vehicle battery connector	12V 24V, optional 230 V
Temperature range	-15°C to -25°C
with digital thermostat	+20°C to -25°C
Input	120 W
Compressor Danfoss	BD 80
Sliding cover	
Unpacked weight	50 kg
Mass W x D x H	1045 x 661 x 915

Article name	Special feature	Article N°	Euro CHF
WEMO GTE 3300	12V 24 V	215900-3	2445.-

Options:

A with priority circuit 230V	103502	120.-
Dig digital display	103501	120.-

Chest Freezer WEMO GTS 3726 Medi

Product description:
The WEMO GTS 3726 Medi is a well-proven deep freezer for drug delivery; thanks to the robust full metal housing and the 130 mm thick insulation, it has a very long autonomy in case of failure. By the internal cooling fan, a very stable internal temperature is guaranteed. Optionally, the chest is equipped with data and telematic recording. See page 109

Technical specifications:

Net capacity	342 Liters
Vehicle battery connector	12 Volt, 24V, optional 230 V
Temperature range	-15°C to -25°C
with digital thermostat	+20°C to -25°C
Power consumption +5°C/25°C	11,6 W/h
Power consumption +5°C/43°C	18,4 W/h
Power consumption +5°C/25°C	32,2 W/h
Power consumption -18°C/25°C	21,2 W/h
Input	70 W
Compressor Danfoss	BD 35F
Unpacked weight	72 kg
Mass W x D x H	1372 x 809 x 919

Article name	**Special feature**	**Article N°**	**Euro CHF**
GTS 3726 Medi	12V 24 V	218150	3586.-
Options:			
A with priority circuit 230V		103502	120.-

Subtropics suitability to outdoor temperatures of 55 °C, when used as a cooling device +2 to +8 °C.

The journey with the molecule R134a

Welcome to the journey through a cooling system. You travel with me; my name is Tetra Fluor Ethan. I was discovered by Du Pont in 1928, nevertheless I wasn't competitive versus the FCKW R12. Only in 1992 it has been reminded to me that I am chlorine free - but the majority calls me R134a. My molecular weight is 102.04 g/mol. I am a liquid gas: sometimes liquid, sometimes gaseous. My density in liquid state is 1210 kg/m3; consequently I am heavier than water. Gaseous I am 4.4 kg/m3 heavy, which is around 4 times heavier than air. I am colorless and tasteless as air and water. I boil at -26°C, as there lays my boiling point. I get hard and stiff by -101°C, as there lays my melting point. I am non-toxic for the humans, don't burn or explode. Although I don't attack the ozone layer I have a greenhouse effect. Others say, I am a greenhouse gas and my effect would be 1300 times greater than that of carbon dioxide. I shouldn't be easily left in the atmosphere. The EU-Policy wants to prohibit me since 2011. However what comes after me is flammable, explosive and deadly.

Do you still want to travel with me? Then you get in, fasten your seatbelt and hold your breath.

We are at the start of our trip in the intake connection of the compressor. There is a temperature of 10°C and a pressure of 1.5 bars. The connections with the other molecules is thus easy, traffic is gaseous.

So we get into the compressor.

We reach the fully hermetic, closed compressor. At the entrance of the compressor we will be showered by an oil rain. The oil has a temperature of 62 ° C, to which we warm ourselves immediately. The pressure is constant at 1.5 bars. The oil rain is generated from the oil extractor, so that the compressor should run clean. We move ourselves on by the motor winding (that we cool down a little bit more) in direction of the internal intake sockets of the compressor. It goes only forward spasmodically, as in a bumper traffic regulated by traffic lights. But there are no traffic lights, but it is rather the intake valve of the compressor, which opens shortly and lets a few R134a molecules through. Be aware! We stand in front of the intake valve – please hold on and stop smoking. The intake valve opens; we slide into the engine capacity. The piston reached the lower turning point. The intake valve closes, we are locked up and there's no getaway. The piston pushes against us slowly with 8km/h (BD 35F). The pressure increases. It warms our heart. The piston is getting closer, it will be tight slowly. The pressure increases, the temperature crackles, we already have 9.8 bars. Finally the pressure valve opens. The temperature in the last 0.008 seconds has increased to 136°C, as long as the piston is used for a stroke. We leave the cylinder through the pressure valve.

Hold on, what happened now? We go back! “Bummm” – the pressure valve closes, we come to a standstill. A few of the R134a has again drawn into the cylinder. We stand, the pressure is at 9.8 bars, and the temperature is on decline. The quietness before the storm, hold on!

The journey with the molecule R134a

The pressure valve opens and the next few R134a come out from the cylinder. It goes with a breakneck speed towards the compressor output. Here in the pressure valve prevails a speed up to 300km/h. “Bummm” we will be slower again and come to a standstill, the pressure valve has closed again. The temperature declines. The traffic starts rolling again; the temperature declined to 82°C. We leave the compressor capsule and find ourselves in the compressor sockets now. It goes through the hot gas pipe further in the condenser.

It is so tight in the condenser. The pressure is still at 9.8 bars – so all the molecules will be compressed. We give in our warmth; the traffic will be quiet, slow and fluid. Outside of the condenser prevails a temperature of +30°C. At +38°C the traffic is completely fluid. There is an oil drop beside us, it comes from the compressor and accompanies us back again through the whole cooling system in the compressor. Such oil drops hang around all over in the cooling system, mainly at the walls and bows of the piping system. We R134a evaporate and skip off in the atmosphere. You do not see us in a leak.
We enter in the filter dryer having cooling down to 32°C. The pressure is still 9.8 bars. Here it looks like in a garbage dump; all contaminants originated by the assemblage are here stored. Also water molecules that are crept in, either by the assemblage or that are diffused (broken) in the pipe, will be held on here by Silica Gel Beads. Because a single drop of water can lay flat the whole cooling system when injected in the capillary tube, it freezes it and the cooling system is blocked.

At the exit of the filter we enter in the capillary tube. This is a long, thin tube – mostly coined in copper-, around 3 meters long and with 0.6 mm to 0.7 mm of internal diameter. Our fastest section lies ahead, from 9.8 bars up to 1.5 bars. A part of us (around 40%) gasifies on the route. Through their volume increase the speed also increases up to over 600 km/h. It takes heat for the gasification, all this heat won't be withdrawn from the environment but rather from us: That's why we cool down to -19°C.

We reached the evaporator. As a result of the relaxation we feel the urge to move. This is the feature of all molecules and thus we withdraw the heat from the environment. The traffic becomes faster and gaseous. At the end of the evaporator it becomes properly gaseous and it is still -19°C. Now that everything is back on the road in the gaseous state, we will also be warmer. At the tube exit we warm up to + 10°C and reach the starting point of our round trip.

I thank you for the participation on the journey that has lasted 39 seconds.

Installing energy-optimized cooling devices

Introduction:
The fridge in a boat or a mobile home is the greatest energy consumer. Through the 24 hours' work a little energy reduction matters a lot.

With the electrical supply 10 to 20% can be saved here. At a voltage drop of 1.5 V on the supply line it is above 10%. It is so important here to use thick cables. The length in meters from the battery up to the fridge should comply with the cross section in mm2 or be even thicker. Also it's important here to use a switch and plug that are designed for a sufficient current strength. We recommend a minimum switch power of 15 A. If possible, do without the switch and plug and connect the cable directly to the battery as much as possible.

Avoid using ice and deep freezer compartments; this brings savings up to 5%. In many fridges an ice compartment is available, which is very rarely used or not being used at all and requires additional place in the fridge. Here we recommend cooling devices with a flat rear wall evaporator and cooling units with a flat plate evaporator.

Large evaporator surfaces = saving up to 5%
Choose units with large evaporators (cooling elements), those with encircling evaporator freezers; due to the large surface of the evaporator it is possible to transfer heat transfer from the cooling air to the refrigerant with a lower temperature difference. Simply explained: The cooling aggregate must spend less drive power at a higher refrigerant temperature in the evaporator for the same cooling capacity, because it needs to bridge less temperature difference. This also applies to the deployment of an ice compartment. It is also possible with a circulating air blower, which blows on the evaporator to raise the heat crossing voltage on the evaporator. Care must be taken here that the power consumption of the ventilator, which converts completely into heat is not larger than the energy reduction.
Of course the deployment of a finned radiator with a circulation air blower is the best solution at the first moment: Many surfaces on the smallest room. But at the contact of the lamellae with ice, the cooling capacity is approximately zero.

External cooling aggregates = reduction up to 30%
A refrigerator with a rear-mounted cooling aggregate, which is built in a wooden cabinet, is always warm even with good ventilation. This heat pressed through the refrigerator rear wall in the fridge - this heat has to be removed again. If the cooling aggregate is located alongside in the cabinet, in the bilge or even under the mobile home, the wooden cabinet acts as an additional isolation. A refrigerator could be also additionally isolated from outside with Polyurethane Foam plates, too.

Installation and assemblage

Choose a dry, good ventilated place. There should be no heat source nearby.
You should ensure sufficient ventilation with built-in cooling units, as the liquefier (condenser) warms up during the operation.
In vehicles the units must be also fastened and fixed, so that they withstand the occurring acceleration and load change forces and don't shift. You can fasten the refrigerator to the side walls of the installation niche with sheet metal bolts, which are screwed in the outer skin. In case this is not possible, you can mount an installation frame on the outer skin and screw this from the front together. Cooling units with outer skin liquefier could be neither built-in nor drilled, as the condenser could be damaged and so expires the refrigerant, which would lead to a total loss. For fridges with separated cooling aggregates you fasten the aggregate this way, so that it can't shift or fall over. In vehicles the compressor must be horizontally mounted, so that it stands on the four rubber feet. For fastening on the wall we recommend an aggregate mounting bracket, with which the aggregate can be also easily mounted on the rear wall. With correctly mounted cooling aggregates at a 35° inclination we guarantee it functions perfectly. If the cooling aggregate is titled over a long time with reclining transport, ex.: with tilted truck cabins, it must be turned off. Reclining mounted cooling aggregates have an insufficiently oil lubrication, what leads to damage the bearing and the piston. Mount the evaporator in a way that there is around 1 cm distance between the fridge's inner wall and the evaporator, so that the air can circulate. If the evaporator feed line is too long, you can roll up a part of the tube behind the evaporator and/or outside of the fridge.

Cooling pipes with quick couplings
The quick couplings are supplied separately or together. You can separate closed quick couplings.
Padlock the couplings with the protective cap. If you must separate the quick couplings, you should couple these together again within 24 hours. To join separated couplings together clean the couplings from dust at first then remove the protective cap. You can also blow away dust particles. The couplings have to be dry. Now manually screw the couplings together. Then trace the gland with three matching spanners until you sense a resistance. Remember this position and once again drag a quarter turn. Counter the mating coupling, so that the soldered cooling pipe won't be twisted off.

Compressor Built-in Cool-box 37

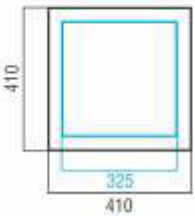

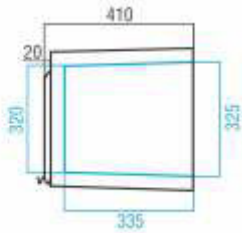

Product description:
The built-in cool-box WEMO 37 is very well insulated and therefore very energy efficient. Available in normal refrigeration and deep freezing (GT) or with a digital thermostat for temperature ranges from +20°C to -25°C. Refrigerant couplings are also available for it. The energy consumption can be thus reduced again when installing the unit in another room.

Technical specifications:

Net capacity	37 Liters
Vehicle battery connector	12V 24 V, optional 230 V
Standard temperature	+10°C to -5°C
Power consumption +5°C/+25°C	4,6 W/h
Power consumption +5°C/+32°C	7,4 W/h
Maximum input	70 W
Weight	17 kg
External dimensions W x D x H	405 x 405 x 420
Internal dimensions W x D x H	335 x 335 x 350
Aggregate measurements	B x L x H 150 x 280 x 180
Cable length	1,5 Meter

Article name	Special feature	Article N°	Euro CHF
WEMO 37	12V 24V	101000	1109.-
Options:			
A with priority circuit 230V		103502	120.-
KU for line separation		581100	198.-
LL Longest cooling line		581110	189.-
GT freezer with compressor DB 100		101200	158.-
Dig with digital thermostat		103501	120.-
Equipment:			
Aggregate mounting bracket		592300	65.-

Compressor Cool-box 200 Box

Product description:
The WEMO 200 Box is based on the same basic housing as the WEMO 200, but is set up. It is also particularly suitable for the installation in small coaches. The aggregate can also be mounted externally. Sideways, left, right, etc. Important when ordering: Specify the cable length.

Technical specifications:

Net capacity	26 Liters
Vehicle battery connector	12V 24 V, optional 230 V
Standard temperature	+10°C to -5°C
Power consumption +5°C/+25°C	8,5 W/h
Power consumption +5°C/+32°C	12,4 W/h
Maximum input	70 W
Weight	19 kg
External dimensions W x D x H	440 x 250 x 770
Internal dimensions W x D x H	375 x 180 x 465
Aggregate measurements W x D x H	150 x 280 x 180

Article name	Special feature	Article N°	Euro CHF
WEMO 200 Box	12V 24 V	111000	1090.-
Options:			
A with priority circuit 230V		103502	120.-
KU for line separation		581100	198.-
LL Longest cooling line		581110	189.-
GT freezer with compressor DB 100		101200	158.-
Dig with digital thermostat		103501	120.-
Equipment:			
Aggregate mounting bracket		592300	65.-

Compressor Built-in Cool-box 30 Box

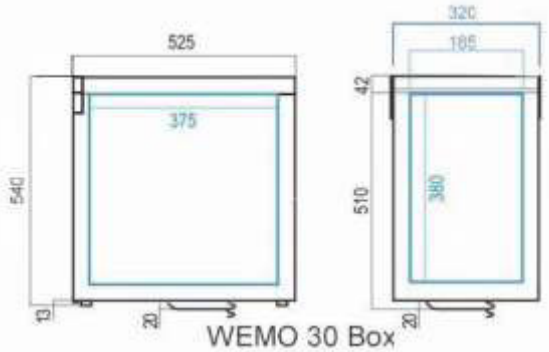

Product description:
The WEMO 30 Box is based on the same basic housing as the WEMO 30 GS, but is set up. It is also particularly suitable for installation. It is designed for deep freezing. With the digital thermostat cooling / freezing are possible. The aggregate is mounted externally. The standard cable length is 1.5 Meter.

Technical specifications:

Net capacity	33 Liters
Vehicle battery connector	12V 24 V, optional 230 V
Standard temperature	+10°C to -5°C
With Digital thermostat	+20°C to -25°C
Power consumption +5°C/+25°C	3,6 W/h
Power consumption +5°C/+32°C	6,8 W/h
Power consumption -18°C/+25°C	26,8 W/h
Power consumption -18°C/+32°C	37,6 W/h
Maximum input	70 W BD 35 F
Weight	22 kg
Aggregate measurements W x D x H	150 x 280 x 180

Article name	**Special feature**	**Article N°**	**Euro CHF**
WEMO 30 Box	12 Volt 24 Volt	112000	1472.-
Options:			
A with priority circuit 230V		103502	120.-
KU for line separation		581100	198.-
LL Longest cooling line		581110	189.-
GT freezer with compressor DB 100		101200	158.-
Dig with digital thermostat		103501	120.-
Equipment:			
Aggregate mounting bracket		592300	65.-

Compressor Built-in Cool-box 35 Box

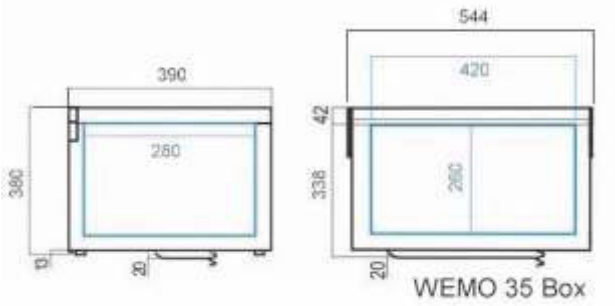

Product description:
The WEMO 35 Box is based on the same basic housing as the WEMO 35 GS, but is set up. It is also particularly suitable for installation. It is designed for deep freezing. With the digital thermostat cooling / freezing are possible. The aggregate is mounted externally. The standard cable length is 1.5 Meter.

Technical specifications:

Net capacity	35 Liters
Vehicle battery connector	12V 24 V, optional 230 V
Standard temperature	+10°C to -5°C
Power consumption +5°C/+25°C	4,6 W/h
Power consumption +5°C/+32°C	7,6 W/h
Power consumption -18°C/+25°C	27,6 W/h
Power consumption -18°C/+32°C	39,6 W/h
Maximum input	70 W BD 35 F
Weight	19 kg
Aggregate measurements W x D x H	150 x 280 x 180

Article name	Special feature	Article N°	Euro CHF
WEMO 35 Box	12V 24 V	113000	1472.-
Options:			
A with priority circuit 230V		103502	120.-
KU for line separation		581100	198.-
LL Longest cooling line		581110	189.-
GT freezer with compressor DB 100		101200	158.-
Dig with digital thermostat		103501	120.-
Equipment:			
Aggregate mounting bracket		592300	65.-

Compressor Built-in Cool-box 55 Box

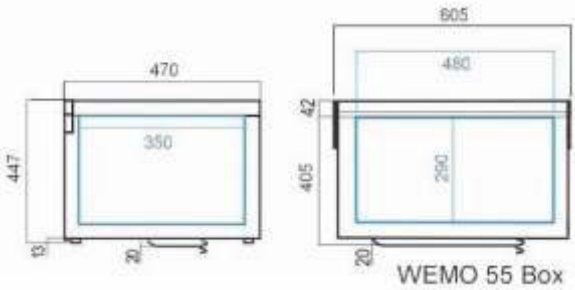

Product description:
The WEMO 55 Box is based on the same basic housing as the WEMO 55 GS, but is set up. It is also particularly suitable for installation. It is designed for deep freezing. With the digital thermostat cooling / freezing are possible. The aggregate is mounted externally. The standard cable length is 1.5 Meter.

Technical specifications:

Net capacity	55 Liters
Vehicle battery connector	12V 24V, optional 230 Volt
Standard temperature	+10°C to -5°C
With Digital thermostat	+20°C to -25°C
Power consumption +5°C/+25°C	6,9 W/h
Power consumption +5°C/+32°C	8,4 W/h
Power consumption -18°C/+25°C	28,4 W/h
Power consumption -18°C/+32°C	38,0 W/h
Maximum input	70 W BD 35 F
Weight	26 kg
Aggregate measurements W x D x H	150 x 280 x 180

Article name	Special feature	Article N°	Euro CHF
WEMO 55 Box	12V 24V	114000	1736.-
Options:			
A with priority circuit 240 Volt		103502	120.-
KU for line separation		581100	198.-
LL Longest cooling line		581110	189.-
GT freezer with compressor DB 100		101200	158.-
Dig with digital thermostat		103501	120.-
Equipment:			
Aggregate mounting bracket		592300	65.-

Compressor Built-in Cool-box 110 Box

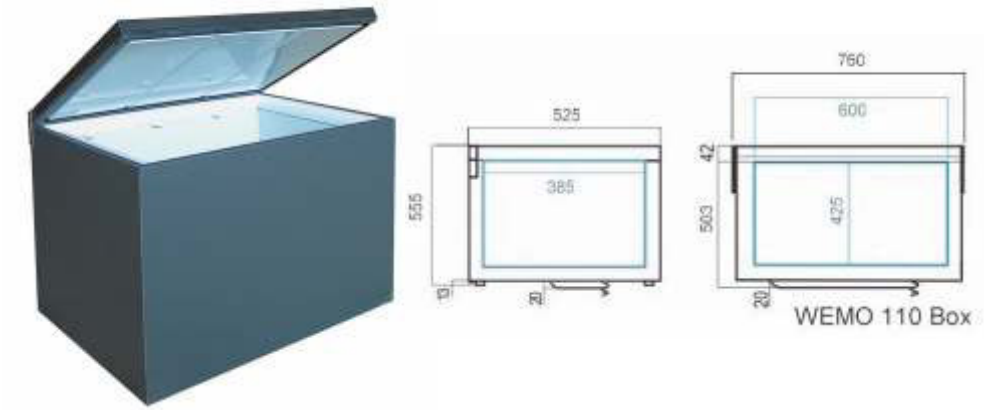

Product description:
The WEMO 110 Box is based on the same basic housing as the WEMO 110 GS, but is set up. It is also particularly suitable for installation. It is designed for deep freezing. With the digital thermostat cooling / freezing are possible. The aggregate is mounted externally. The standard cable length is 1.5 Meter.

Technical specifications:

Net capacity	108 Liters
Vehicle battery connector	12/24 V, optional 230 V
Standard temperature	+10°C to -5°C
With Digital thermostat	+20°C to -25°C
Maximum input	120 W BD 80
Weight	34 kg
Aggregate measurements W x D x H	150 x 280 x 180

Article name	**Special feature**	**Article N°**	**Euro CHF**
WEMO 110 Box	12V 24 V	115000	1909.-
Options:			
A with priority circuit 230V		103502	120.-
KU for line separation		581100	198.-
LL Longest cooling line		581110	189.-
GT freezer with compressor DB 100		101200	158.-
Dig with digital thermostat		103501	120.-
Equipment:			
Aggregate mounting bracket		592300	65.-

Compressor Freezer 30 GS

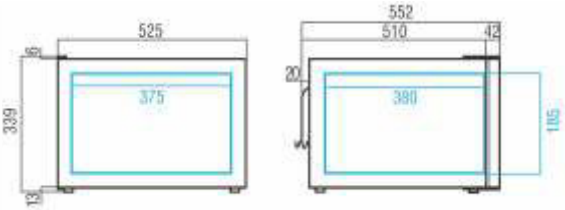

Product description:
The freezer WEMO 30 GS is very well insulated and therefore very energy efficient. Available as a freezer (GS) or with a digital thermostat for temperature ranges from +20°C to -25°C. Refrigerant couplings are also available for it. The energy consumption can be thus reduced again when installing the unit in another room.

Technical specifications:

Net capacity	30 Liters
Vehicle battery connector	12/24 V, optional 230 V
Standard temperature	-15°C to -25°C
Power consumption +5°C/+25°C	3,6 W/h
Power consumption +5°C/+32°C	6,8 W/h
Power consumption -18°C/+25°C	26,8 W/h
Power consumption -18°C/+32°C	37,6 W/h
Maximum input	85 W
Weight	21,8 kg
Aggregate measurements W x D x H	150 x 280 x 180
Aggregate's cable length	1,5 Meter

Article name	Special feature	Article N°	Euro CHF
WEMO 30 GS	12V 24 V	170000	1472.-
Options:			
A with priority circuit 230V		103502	120.-
KU for line separation		581100	198.-
LL Longest cooling line		581110	189.-
GT freezer with compressor DB 100		101200	158.-
Dig with digital thermostat		103501	120.-
Equipment:			
Aggregate mounting bracket		592300	65.-

Compressor Freezer 35 GS

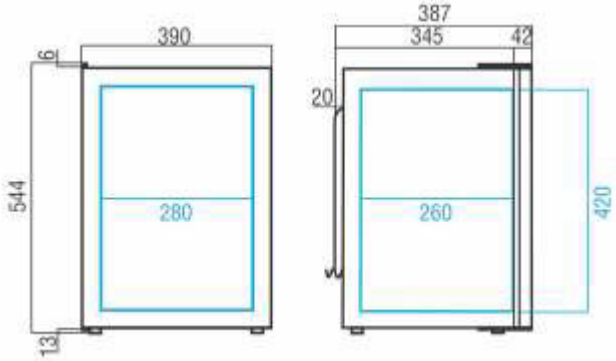

Product description:
The freezer WEMO 35 GS is very well insulated and therefore very energy efficient. Available as a freezer (GS) or with a digital thermostat for temperature ranges from +20°C to -25°C. Refrigerant couplings are also available for it. The energy consumption can be thus reduced again when installing the unit in another room.

Technical specifications:

Net capacity	35 Liters
Vehicle battery connector	12V 24 V, optional 230 V
Standard temperature	-15°C to -25°C
Power consumption +5°C/+25°C	4,9 W/h
Power consumption +5°C/+32°C	7,8 W/h
Power consumption -18°C/+25°C	27,8 W/h
Power consumption -18°C/+32°C	38,9 W/h
Maximum input	85 W
Weight	19 kg
Aggregate measurements W x D x H	150 x 280 x 180
Aggregate's cable length	1,5 Meter

Article name	Special feature	Article N°	Euro CHF
WEMO 35 GS	12V 24 V	172000	1473.-
Options:			
A with priority circuit 230V		103502	120.-
KU for line separation		581100	198.-
LL Longest cooling line		581110	189.-
GT freezer with compressor DB 100		101200	158.-
Dig with digital thermostat		103501	120.-
Equipment:			
Aggregate mounting bracket		592300	65.-

Compressor Freezer 55 GS

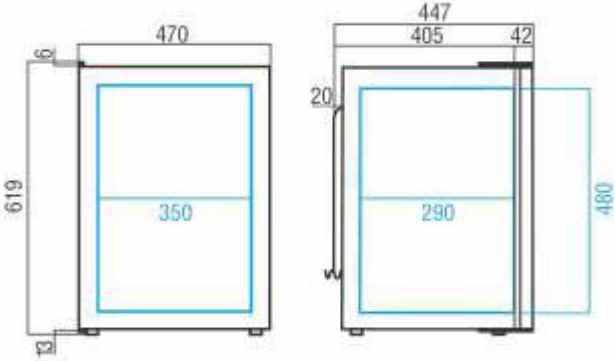

Product description:
The freezer WEMO 55 GS is very well insulated and therefore very energy efficient. Available as a freezer (GS) or with a digital thermostat for temperature ranges from +20°C to -25°C. Refrigerant couplings are also available for it. The energy consumption can be thus reduced again when installing the unit in another room.

Technical specifications:

Net capacity	55 Liters
Vehicle battery connector	12V 24 V, optional 230 V
Standard temperature	-15°C to -25°C
Power consumption +5°C/+25°C	6,9 W/h
Power consumption +5°C/+32°C	8,4 W/h
Power consumption -18°C/+25°C	28,4 W/h
Power consumption -18°C/+32°C	38,0 W/h
Maximum input	85 W
Weight	27 kg
Aggregate measurements W x D x H	150 x 280 x 180
Aggregate's cable length	1,5 Meter

Article name	Special feature	Article N°	Euro CHF
WEMO 55 GS	12V 24 V	174000-3	1645.-
Options:			
A with priority circuit 230V		103502	120.-
KU for line separation		581100	198.-
LL Longest cooling line		581110	189.-
GT freezer with compressor DB 100		101200	158.-
Dig with digital thermostat		103501	120.-
Equipment:			
Aggregate mounting bracket		592300	65.-

Compressor Freezer 110 GS

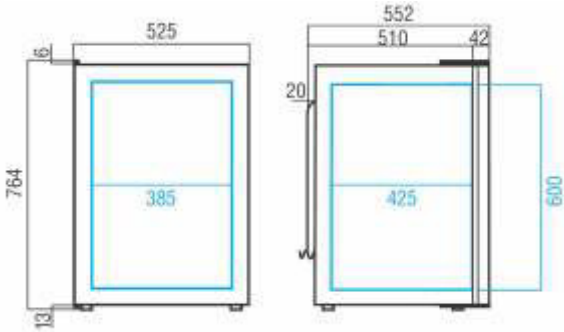

Product description:
The freezer WEMO 110 GS is very well insulated and therefore very energy efficient. Available as a freezer (GS) or with a digital thermostat for temperature ranges from +20°C to -25°C. Refrigerant couplings are also available for it. The energy consumption can be thus reduced again when installing the unit in another room.

Technical specifications:

Net capacity	108 Liters
Vehicle battery connector	12V 24 V, optional 230 V
Standard temperature	-15°C to -25°C
Maximum input	120 W
Kompressor	BD 80
Weight	34 kg
Aggregate measurements W x D x H	150 x 280 x 180
Aggregate's cable length	1,5 Meter

Article name	Special feature	Article N°	Euro	CHF
WEMO 110 GS	12V 24 V	176000	1827.-	
Options:				
A with priority circuit 230V		103502	120.-	
KU for line separation		581100	198.-	
LL Longest cooling line		581110	189.-	
GT freezer with compressor DB 100		101200	158.-	
Dig with digital thermostat		103501	120.-	
Equipment:				
Aggregate mounting bracket		592300	65.-	

How to produce voltage drop?

The voltage drop in the cable results from the resistance that every cable has. A thin and long cable has a greater resistance and accordingly a greater voltage drop than a thick short cable. It is the same as with a water tube: through a thick tube more water passes than through a thin one.

Measuring voltage drop
The voltage drop in a cable can be measured. Measure the following values with a voltage measuring device for direct current (DC) at the plus and minus terminals of the electronic control of the compressor:

Value 1: Turn off the compressor over the thermostat or set the thermostat on zero. Now note the value that the voltage measuring device shows. The value should lay between 12 V and 14 V. If it is lower than 12 V then control or charge the battery. If the value is 0 then there is no current.

Value 2: Turn on the compressor over the thermostat. Note the shown value now. It should lay between 11 V and 14 V. Then deduct the value 2 from the value 1. The result is the voltage drop in volt.

Example:
Value 1: 13 V
Value 2: 12.8 V
Voltage drop: 0.2 V

If the voltage drop is greater than 0.5 V, the supply line to the compressor is too weak. In this case you must:

* Install a thicker cable
* Connect the cable directly
* Fix any possible intermittent connection
* Test the battery

Recommended cable thickness:
Measure the length in meters from the battery through each distribution box and side bracket to the refrigerator; the cable should have more cross section in mm2 than the length in meters. The used switch should have a minimal switching capacity of 15 A.

Draw up of voltage drop diagram

Introduction:
The main problem with 12 V low voltage systems is the voltage drop at the individual components; which in practice is given very little attention and frequently leads to operational problems with the fridge, as this possesses an under voltage cut off.

For the draw up of a voltage drop diagram you require: Paper, writing implement, volt meter (the best is the digital with milli-volt range), 4 to 5 meters of stranded wire (wire), luster terminal.

Note the individual measuring points to which you have access. When measuring on the line from the positive pole of the battery through the fridge to a negative pole of the battery, proceed as follows:

Positive pole at the consumer battery (plumb)
Cable (copper) to the battery terminal positive pole *45 mV*
100 mV
Main switch input *45 mV*
Main switch output *100 mV*
Main distributor input *240 mV*
Fuse input *820 mV*
Fuse output *1205 mV*
Fridge AC adapter input
Output AC adapter
Frontal positive connector of the fridge
Positive input terminal of the fridge
Negative input terminal of the fridge
Ground bus at the main distribution
Negative pole at the consumer battery (plumb)

Now switch on the fridge; measure the voltage between the individual points and record these values. 1000 mV (milli-volt) are 1 V. If the points are too far apart prolong the measuring capacity with the stranded cable and the luster terminal. You can also skip individual points, as in the example from the main fuse holder input directly to the output, and this value is exactly equal to the individual values combined. The voltage drop of 820 mV or 0.82 V over the fuse would be in our example way too high. The fuse wouldn't have to be replaced here but the whole fuse carrier. It is important to measure before and after the switch as here are located the error sources, which arise through the years.

Water cooling system, pros and cons

Introduction:
In boats refrigeration equipment the demand for water cooling systems happens often. There are different variations of water cooling systems and each has its own advantages and disadvantages. However, in air-cooled aggregates that are ventilated, the air is sucked up from the bilge in order to notice hardly any disadvantages.

Water cooling with outer tube
There is an about two meters long tube made of stainless steel or copper, nickel and iron below the water line along the mounted hull, with about 2 to 5 cm of spacing.
Pro: Very good heat dissipation even with marine growth.
Con: There are barely contact suppliers, big risk of damage.

Water cooling with keel cooler or outer sponge
Here is a good hand big heat exchanger installed externally to the hull. It is mounted via a hole of 50 mm diameter, and the whole thing is then bolted from the inside - with refrigerant couplings easily connectable to a pulse generator. Patented - the only manufacturer is Frigoboat. Keel coolers are purchased by Wemo from Frigoboat.
Pro: a relatively simple installation, excellent heat dissipation with no marine growth.
Con: With a rapid marine growth there is a reduction of the heat release, not suitable for aluminum hulls (corrosion).

Water cooler in the drain support
Is circumventing the patents of the keel cooler of Frigoboat. The installation is the same for the drain support and the keel cooler. Due to the up and down motion of the water in the waves, the heated water is purged from the process.
This process is available through the company Isotherm.
Pro: Easy to install, instead of a drain support.
Con: There is no wave motion or sink available to drain the hot water in the process, and the heat dissipation is greatly reduced. The same applies to marine growth; these can then be very difficult to clean.

Plate heat exchanger, taped inside the fuselage
Where a copper pipe is usually glued to the inside of the hull or even laminated into the fiberglass, the needed area is about 0.5 m2.
Pro: Easy installation with no drilling holes in the hull.
Con: Performance management and inclination affects the refrigerant quantity, thus filling must be readjusted. Unsuitable for wooden hull, clean installation required. WEMO provides such refrigeration coils including thermally conductive adhesive cartridge.

Water cooling system, pros and cons

Water cooling with pump
Here seawater is pumped by a pump through the heat exchanger water / refrigerant.

Pro: The water is directly from the cooling aggregate, no assembly on the refrigerant side.
Con: When the pump needs electricity in dirty waters it is recommended to filter quickly.

No cooling on dry places.

Water and air cooling in combination
Here, the unit has two heat exchangers, an air cooler and a water cooler, the pump is switched via a thermostat on the water cooler - this ensures that the pump only runs when needed and draws power.

Pro: The pump for the water cooling system can be installed at a later date. The compressor, because he is in the air flow, is also cooled. Also works when the boat stands in the dry.
Con: Higher replacement costs.

We only offer the air / water cooling coils to stick on the board inside, the keel cooling of Frigoboat, keel cooling on the cooling units with compressor BD 35 F, the air / water cooling in all units and cabinets with external cooling aggregate.

Article name	Special feature	Artikel-Nr.	Euro	CHF
Water cooling	With no pump	581510	209.-	
Air / water cooling	With no pump	581500	327.-	
Cooling water pump		581600	248.-	
Keel cooler 50 mm		581505	420.-	
Keel cooler 150 mm		581506	440.-	

Danfoss compressors become SECOP

Since 1972, Danfoss builds totally hermetic power compressors. The Urmonster BD3 R12, not to be confused with the BD3F. The BD3 was still built upon the PW-compressor. Many old-12V cooling machines can be admired here in the exhibition (as well as cut compressors).

Danfoss becomes SECOP
2010, Danfoss sold the compressors division to the investor group Aurelius AG, headquartered in Munich. The head office of Secop is located at the former site of Danfoss Flensburg.

Today's SECOP compressors are getting smaller and more powerful.
The BD 35 F is now the most built up compressor. Compressors such as the BD 150, with 18 A of power consumption have the same whirling sound and the same size as the BD 35 F, but are more impressive. Also the BD compressors running at R23 and reaching temperatures below -100°C are worth mentioning. These highly bred compressors have the same parts and bearings as the BD 35 F, as the ones used in the leisure sector. When buying a Danfoss BD compressor, you benefit from the years of experience of this company.

The BD 35 F is not operated with DC current, but with AC. The system's electronic control unit turns the 12 V DC into 12 V AC (3-phase). Via the frequency controls the compressor speed can be easily adjusted from 2000 to 3500 U / min; for
BD 80 up to 4400 U./ and for BD 120 up to 6000 U./min.

The speed is increased to the maximum by means of a thermostat in the loop between terminal T and C for the switched-in series resistance of 3,500 ohms. This resistor is available as a high-resistance under Item N°500284-0 for 4.50 Euro or 5 CHF. Instead of the resistor, the Vario speed circuit board can be placed. Thus, the rotations can be adjusted in 500 increments, Item N°500282-0 for 13.60 Euro or 15 CHF. When using both, nothing works.

High-power switch for changeover from high to low speed. Item N°500285 for 18 Euro 18 or 20 CHF.

Danfoss compressors become SECOP

BD 250 F

BD 35F

BD 1.4 F

Development continues down into the small Built size with the BD Micro or BD 1.4, which we run in stock from 2013. It is much smaller than the DB 35 and 2 kg lighter. It is sufficient for cooling volumes up to 60 liters net. Aggregate, see page 86.

For the BD 120, BD 220 up to BD 350 we increase the power by a multiple. We mainly mount these compressors in the transport refrigeration equipment transCooler, more on page 88.

The under-voltage protection is Standard on all compressors:
The default is the under-voltage protection of 10.4 (22.8) and uptp 11.8 (24.2). Previously, the values were higher.

Up to the compressor BD 120 a jumper may be between the terminal C and P, the under-voltage protection to 9.6 (21.3) and from 10.9 (22.7) is a set down. Turning off the under-voltage protection is not possible; it is only possible to remove the under-voltage protection for 24 volt. At first the installation should be checked, or rather create a voltage drop chart (see page 60) before the under-voltage protection is set lower.

Starting from the compressors BD 220 and BD 350, the controls must be reprogrammed.

WEMO built Danfoss Compressors since 1972.

Aeration of cooling units

Introduction:
The ventilation of the cooling unit is related to the cooling capacity and energy consumption is the most important factor.

The lower is the temperature of the condenser (liquefier), the better is the cooling capacity. The crucial factor is the refrigerant liquid temperature or the filter temperature (thick copper cartridge at the condenser outlet). It is important to consider two things: the cool air and the air duct. When using external cooling units, it is relatively easy to set up these from the refrigerator in a well-ventilated or in a large room, e.g. under the vehicle floor, in a locker, in the bilge, in the rear garage f the motor-home.
In the engine room, a cabinet next to the refrigerator, under a bed or bench, it is actually cool enough, but as by the residual heat of the drive motor and the heating of the cooling unit, it heats up quickly in small spaces; here it is advisable to channel the air so that the air sucked by the fan does not pass two times through the heat exchanger. For this ducting the cooling unit is connected directly to the condenser through a 100x100 mm hole in the wall so that during the operation more fresh air is sucked from the adjacent room (with an exhaust tube of a steam trigger or a toilet exhaust fans, which is mounted on the front of condenser and runs from there into the boat bilge or in the vehicle floor and draws cool air directly from the outside).

Using the heat of the cooling unit. Here are some examples:
When mounting the cooling unit in a closet with air from outside: So the clothes are dried.
When mounted in the bilge it encourages the dehumidification of the bilge.
When mounted in the locker it dries wet ropes and sails for example.
When mounted in the engine compartment with air hose the engine room is regularly ventilated by the fan.
When mounted in the motor-home intermediate bottom (storage) or the rear garage, there is hardly any condensation due to the constant heating.

Placing the air hose set (see page 127).

Energy consumption of refrigerators

DIN and EN standards
The energy consumption of a refrigerator is another matter. There are for example the standards DIN 8953 and EN 153, with which the energy consumption of household refrigerators is compared. For small compressor units these standards are only partially applicable because not the same conditions prevail as in domestic refrigerators.

Specification in watts
It makes a difference whether the energy consumption in amperes is measured at 11 V or 14 V. For 1 Ampere und 11 V the consumption is 11 W and for 14 V it is 14 W. This is a difference of 27%.

Value information in the catalog
The values for energy consumption were measured in closed, freestanding appliances and stable ambient temperature of +25 ° C or +32 ° C.

The refrigerator and children
What kids have to do with the energy consumption of your refrigerator? Children first reach the fridge and think only then - with the door open - what they want. This applies to children of all ages.

Cooling of goods
Example for energy consumption: To cool a liter of beverage in the fridge from +25°C to +5°C, it takes 24 W or 2A/h at 12 V voltage.

Sample calculation for energy consumption
You want the beer that you have purchased and put in the trunk of your car to cool down from +30°C to a pleasant +8°C. Since you invited friends to a good drink in the evening and you are not stingy, you want to cool 20 liters of beer. This corresponds to 24 kg to be refrigerated including bottles.
The refrigerator must cool down the beer from +30°C to +8°C.
Calculation:

- Temperature difference = 22°C
- Weight of the material to be cooled = 24 kg
- Specific heat capacity = 1,163 W/kg °C
- Cooling requirements = 22°C *24 kg * 1.163 W/kg °C = 614 Watt
- You have for example a refrigerator with 70 W / h cooling capacity. So this refrigerator runs 8.8 hours (614 W: 70 W/h) in order to cool the beer.
- The fridge also has a power consumption of 8.75 W / h, i.e., 8.8 hours once again 77 W. This results in an additional hour period to keep the refrigerator cold.
- Overall, the refrigerator runs almost 10 hours and needs a battery power of 700 W, which corresponds to a battery capacity of 58A/h.

Troubleshooting

When your refrigerator drops out, it always happens at the wrong moment. With this checklist you can go to the bottom of the problem and possibly fix it yourself or describe the symptoms more accurately to the service location. In addition, you can correct easily any interference to the startup.

Most common disorders
Most of the problems that are reported to us are due to a bad power supply. Often feeding by too thin cables, unfortunately, also by professionals and even on new vehicles from the factory.

The auto industry has been building since a few years the cigarette lighter socket in the trunk of the passenger car. These are usually connected with a cable of 0.5 mm2. The cigarette lighter was originally intended for lighting cigarettes, and not to operate coolers. For long-term consumers such as ice boxes, which receive a constant stream over time, thin plug and cables are not suitable, because they heat up and can cause an electrical fire.

All of WEMO compressor cooling units are equipped with an under-voltage protection that switches off the unit in case of poor power supply and tries to start it again, what is indicated by a slight whirring sound every 20 seconds. Please see Page 62/63.

About 80% of the faults are due to a lack of power supply.

Troubleshooting

Device cools too much:

Faulty thermostat	Replace thermostat
Thermostat sensor is not in the cooling element	Mount the thermostat sensor
Short circuit conjunction for thermostat cable, terminals C + T	Eliminate the short-circuit

Little or no refrigeration capacity, the compressor vibrates and is warm:

Dirty condenser	Clean the condenser
Compressor excessively hot +60°C	(e.g. blowing out or vacuuming)
Better ventilation of the Aggregate	
Faulty condenser ventilator	Replace ventilator
Lack of refrigerant	Refrigeration specialist
Topping up with refrigerant	WEMO Refillable Cartridge
Mechanical damage to the compressor, compressor extremely hot +60 ° C	Refrigeration specialist
Water pump (for water cooling) is defective or clogged	Clean water pump and filter
Compressor runs on low speed	Increase the speed to high-speed

Compressor is not running, is cold and condenser ventilator is running:

Too low supply tension section terminals	Use thicker cables, check
	Test the battery
Power supply provides 24 V only	Power supply must be at least 25 V
Faulty thermostat	Short circuit terminals C + T, Replace thermostat
Faulty fuse (only compressor BD2-3F) fuse (with gray cover)	Observe correct polarity, replace
Power supply provides too little powe	Get 160 VA to test the battery
Faulty electronic control	Test the compressor

For the compressor BD2-3F: Measure at the three pin connectors whether current flows or not. If in order, request the electronics replacement.

No passage:	Faulty compressor

Compressor BD35F: The three pin connectors must have the same resistance (about 5 Ohm).

Compressor tries to run every 20 seconds or every two minutes, ventilator functions shortly and then runs again:

Ventilator blocked, excessive current consumption	Detach the ventilator, try again
Excessive voltage drop during startup	Battery low
	Cable cross-section too small
	Voltage drop chart page
Faulty electronic control	see above
Compressor blocked	Refrigeration specialist

Electrical diagram of Danfoss Compressors

Standard BD35F, BD50F, BD60F, BD80F, BD80CL, BD100CN, BD120CL
Port 12/24 Volt

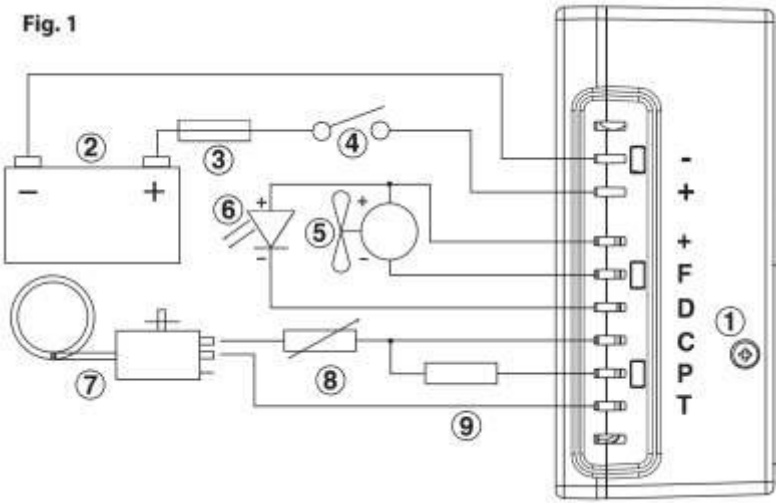

Standard BD35F, BD50F, BD80CL
Port 12/24 Volt 100 up to 240 Volt AC

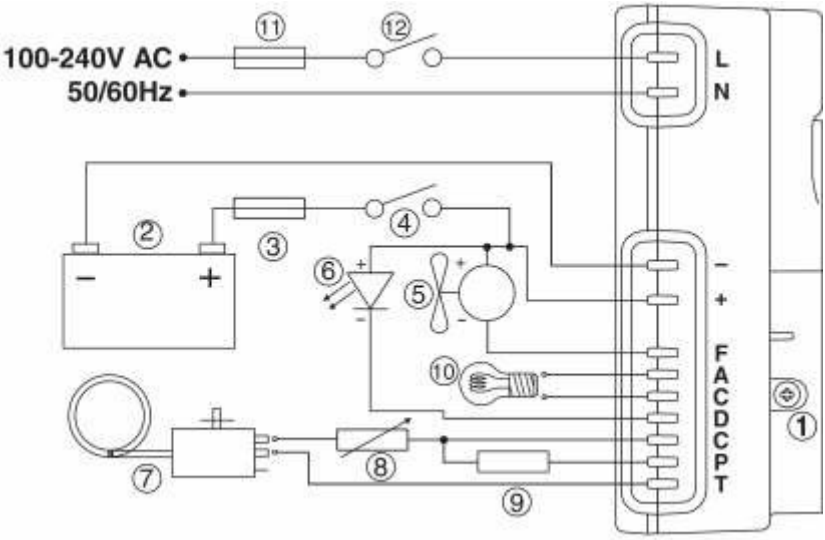

2 - 12 or 24 Volt battery
3 - Fuse 15 to 30 A
4 - DC switch
5 - Fan condenser
6 - Control diode
7 - Thermostat
8 - High speed resistance 1500 Ohms
9 - Resistance under-voltage protection
10 - Interior lighting, 12 volt continuous current
11 - Fuse AC 5 A
12 - AC switch

Compressor split cooling unit

Product description:
Split cooling units for self-installation with quick couplings for easy power implementation. All of the following units for 12V / 24V either have a compressor BD 35F or BD 80 - for 230 V units an Aspera compressor is installed.
In general, a mechanical thermostat is included, but for a more precise control we recommend a digital thermostat with room temperature measurement digital display of the current temperature. The split cooling units are not only suitable for installation in boats and caravans. We also manufacture, according to customer requirements, aggregates for industry and commerce, but mostly here with 230 V supply tension.

The most common questions about cooling units.

How much power needs a cooling unit?
The power consumption depends primarily on the size of the housing and the insulation, then on the fitting of the cooling unit, and only as a last resort on the choice of the evaporator. For power consumption: Compare your housing with an equally large refrigerator or an equally large cooler and take their consumption data.

How far can the unit be away from the evaporator?
The standard cable measures 1.5 meter, sometimes even a little longer. Easily available up to 10 meters in length. For even longer cables the amount of refrigerant has to be readjusted after installation. Cooling units with longer cables are made to order.

Can an aggregate be screwed to a wall?
The compressor must be mounted horizontally, so that it stands on four rubber feet. Using the unit mounting bracket, the unit can be screwed to the wall. See page 129.

How can and should an evaporator be mounted?
The installation position plays no role. The evaporated is best mounted with at least 10 mm from the wall (so the long cable can be laid behind the evaporator or in a loop). The evaporator should be mounted on top if possible because of the cold drops.

How big must be an evaporator?
The more surface has an evaporator, the higher the efficiency of the cooling system. The best are large flat evaporator plates which are bent and run over two or even rarely three.

Why does a plate evaporator have more power?
It has more surface area, but to show the surface effect, an air flow must be generated. This happens using a small ventilator. It should be noted that the electric current taken by the ventilator is discharged in the refrigerator as a heat. This heat must be dissipated by the cooling system again, which results on an increased consumption. Each evaporator is located by the ice. When the lamellas in the evaporator grow bigger, the air cannot circulate: Thus, the evaporator has no more power. The plate evaporator fan should always run even when the compressor is on standby in order to defrost the lamellas during the service life.

Can I also install a ventilator on the evaporator plate?
Yes, but do not drill screws into the evaporator. The ideal is to blow the cold air behind the plate evaporator. It is also recommended to control the fan by a separate switch and turn it on during the cooling of hot foods.

How fast does a cooling unit cool down?
Here the best for you is to read page 69.

How long does a cold storage last?
When the memory is fully cold loaded and it has a memory capacity as 100 W (see page 85). Has a 60l fridge a chill requirement of 12 W / h, then the memory holds 8.3 hours (100: 60 = 8,3).

Why does a cold storage use less power?
The fact that a cold storage uses less power does not correspond to reality: The memory must be loaded first, in order afterwards to supply energy. This effort is higher than the return. The memory has the advantage that at times of energy surplus it loads energy and saves the shore supply. In a battery we can store energy faster and better control its retrieval.

Why is the sensor probe necessary to the evaporator?
The most commonly used thermostats are evaporator thermostat with capillary. To control the temperature of the evaporator plate and not the refrigerator temperature, and this thermostat, the sensor must be bolted to the plate to be clamped or glued. If this is not the case, the refrigerator cools too little. Also it takes much longer to turn on and cool down. We can remedy to this by using a room thermostat that measures the room temperature. See page 124

Compressor split cooling unit

How thick must be the supply cable?
The cable length in meters from the battery to the refrigerator corresponds to the cross section of the cable in mm2 (or greater). Learn more about this topic on page 62.

What is water cooling?
More on page 64.

Should I install more cooling units on the center?
No, but due to higher ambient temperatures it is recommended to ensure good ventilation and heat dissipation in the cooling unit. More on page 64/68.

Can I use the same units for cooling and freezing?
Basically yes. A freezer has about 3 times more power consumption than a refrigerator, thus a 3 times stronger cooling unit is required. The thermostat must be designed to be ranging up to -20°C or -25°C. Here, a unit with a BD 80 or BD 120 compressor is recommended to be used with frozen refrigerant R404a.

Can the couplings be separated again?
The couplings may be used by us in accordance with manufacturer's instructions repeatedly opening and closing. If the couplings are not clean in the assembly, dust particles destroy the seal. When closed, they are close, but do not open again at 100%. They should be closed together again as soon as possible. Competitors use "One Way" couplings or also groove couplings. These can be screwed together only once and become then scrap. When you re-open the couplings the entire refrigerant charge escapes in the atmosphere. According to EU Directives it is forbidden. A test run at the factory before delivery is not possible with these couplings.

How does the compressor end the evaporator sizes fit?
Does the capacity of the compressor match the evaporator? The Danfoss compressors are speed regulated. Via series resistors in the thermostat loop, the speed can be adjusted. We provide everything with a series resistor. If it is connected, the compressor instead of running at 2000 rpm./Min runs at 3500 rpm./Min. We recommend that the compressor always runs at full load. So you have the full power when cooling down and less run time on the compressor. The compressor runs at 3500 rpm./Min instead of 2000 rpm./Min, the power consumption is higher by 74% and the cooling capacity by 70%. But the advantages of cooling down and loading a memory weigh.

Compressor split cooling unit

What is the new AEO control from Danfoss?
AEO stands for Adaptive Energy Optimizer: This control is available since 2003 at Danfoss and adjusts the on-off speed of the thermostat. This reduces the power consumption, but the running time of the compressor increases. The energy saving is less than 2%.

What is the AC / DC electronic from Danfoss?
AC / DC is like music to the ears: Cause I'm T.N.T, I'm dynamite (T.N.T) and I'll win the fight (T.N.T) I'm a power load (T.N.T) watch me explode. A very successful Australian hard rock group. But in good German AC / DC is called Alternating Current / Direct Current, and this control can be operated with 12 V / 24 V DC and 110 V / 230 V AC and is available since 2006. See page 127.

In which direction must the fan blow?
The coolest point in the cooling unit should be the condenser. Therefore the cold air must first pass the condenser and the compressor.

How can the cooling tube of the evaporator be bent?
The best is to turn it around both thumbs (with at least 50 mm radius). Never bend a pipe!

Must the conduit be isolated?
Technically speaking no, since the cooling beginning takes place only in the evaporator plate. Even if there is no power supplied to the refrigerant, the refrigerant comes to 0°C in the refrigerator; then condensation can form on the non-insulated pipe.

What if the cable get attached to ice?
Then there is too much refrigerant in the cooling system, and this should be expertly sucked and not just vented into the atmosphere.

Why the WEMO BD 50 F does not appear in the assortment?
The BD35F and BD50F differ only in their capacity. The BD 35F has 2 cm3, the BD 50F 2,5 cm3. They have the same engine and the same controls. The maximum evaporation temperature for BD35F is at -5°C, and it has since then a cooling capacity of 122 W. The larger BD 50 F is allowed to -15°C and it has a cooling capacity of 95 W. Higher it may only be used with an additional cooling fan on the controller. See page 125. In poor supply voltage (11 V under load) and large-volume cooling systems with quantities over 100 g of R134 and with a warm device, the compressor pulls after starting more than 10 A of current. At 10 A, the controller turns off after 30 seconds. The device makes an attempt to start every two minutes, but does not cool. (Sources: Original Danfoss data sheets, www.danfoss.com)

Cooling unit evaporator plate without couplings

Product description:
The split cooling unit with a plate evaporator is mainly suitable as a replacement for Peltier cooling units that are "cooling systems" from the inside and outside depending on a ventilator. When disassembling a hole of 215 x 215 mm is formed. From the outside, the evaporator plate is pushed into the fridge, the hole is isolated and the evaporator plate screwed on the hole.

Technical specifications:

Cooling volume of	70 Liters
Vehicle battery connector	12V 24 V, optional 230 V
Cable length	1,5 Meter
Power consumption	Depending on the housing
Maximum input	40 W
Firmly soldered, filled	
Compressor	Secop BD 35 F
Aggregate dimensions W x D x H	150 x 280 x 180
Evaporator dimensions	312 x 215 x 12

Article name	Special feature	Article N°	Euro CHF
12VISBD35FE0.31	12V 24 Volt	561100	655.-
Options:			
A with priority circuit 230V		103502	120.-
LL Longest cooling line		581110	189.-
Equipment:			
Aggregate mounting bracket		592300	65.-

Service cooling systems

These cooling units are designed for refrigeration technicians and require no refrigerant. Because we constantly get requests from professionals about refrigerators, we have our extensive existing range and now listed since a few years in this catalog.

All service units are equipped with Danfoss compressors.

The 12VIVBD35SA is equipped with the BD 35F compressor and is actually the best-built cooling unit in use up to 200 liters (operates with R134a).

The 12VIVBD50SA is equipped with the BD 50F compressor. The BD 50F has a suitable maximum suction pressure of -15°C and is less suitable for the use by large-volume cooling systems. It can lead with the BD 50 F to startup problems. For this reason, we very rarely set up the BD50F.

The 12VIVBD60SA is equipped with the BD 35F compressor, but with a different controller. Instead of a maximum of 3500 U./Min, the compressor runs with 4400 U./Min. Thus, this combination has the same performance as the BD 50F, but it is allowed for a maximum permissible suction pressure of +10°C. The designation BD 60 is the in-house designation by WEMO. At Danfoss this compressor is a BD 250 GH in the assortment.

The 12VIVBD80SA is equipped with the BD 80 compressor. Not to be confused with the BD 80F for R134a. The BD 80 is operated with R404a and must necessarily be fitted with a start controller however this is included with the unit. The maximum allowable suction pressure of -20°C can be set via the start controller. These compressors are not officially available from Danfoss.

The 12VIVBD120SA is equipped with the BD 120 compressor. It runs on R404a and must necessarily be fitted with a start controller. However, this is included with the unit. The maximum allowable suction pressure of -15°C can be set via the start controller. These compressors are not officially available from Danfoss.

Service cooling units 12V / 24V

Product description:
Service cooling units for the refrigeration technicians. These cooling units are designed to operate without evaporator and refrigerant and must be installed and commissioned by a refrigeration specialist.

The scope of supply:

Danfoss compressor, lamellar condenser, ventilators, control electronics
Cross, filter drier, high-speed resistance

Vehicle battery connector	12/24 V, optional 230 V
Compressor	Secop
Aggregate dimensions W x D x H	200 x 280-320 x 180

Article name	Special feature	Cc	Article N°	Euro CHF
12KOS BD14SA	12/24 V R134 a	70W	532814	582.-
12VIVBD35SA	12/24 V R134 a	93W	532800	631.-
12VIVBD60SA	12/24 V R134 a	117W	532860	678.-
12VIVBD80SA	12/24 V R404 a	164W	532880	997.-
12VIVBD120SA	12/24 V R404 a	249W	532890	1179.-
12VIVBD35SA A	12/24/230 V	93 W	562800	776.-
Lamellar condensor 2 rows 100W/10K			532801	82.-
Lamellar condensor 3 rows 180W/10K			532802	97.-

Cc = Cooling capacity

Aggregate zusammenstellen

Mechanical or digital thermostat

Product Description:
Standard cooling unit with dynamically ventilated high performance condenser. These cooling units are designed to work in boats and yachts. With a cooling capacity of 93 watts and a cooling volume of up to 150 liters. However, they can be used for many other applications.
They are filled with refrigerant and ready to operate.

Article name	Specificity	Article N °	Euro / CHF
12VIVBD35FE	12V 24V	532812	659.-
mandatory option:			
Cooling element, see page 82 ff			
Options:			
A with priority circuit 230 Volt		103502	120.-
KU for line separation		581100	198.-
LL Longest cooling line		581110	189.-
Dig with Digialthermostat		103501	120.-
Accessories:			
Aggregate mounting bracket		592300	65.-

12	VI	V	BD 35	KU	0.02

Operating voltage
12 Volt DC
24 Volt DC
230 Volt AC

Cooling
S: Static without ventilator
V: With ventilator
T: Thermo-ventilator
W: Water-cooling

Cooling element
Evaporator's description

Connections
KU: Couplings
FE: Solid connection
SA: separated with no refrigerant (for cooling firms)

Compressor compartment
KA: Chest
VI(V): Integrated ventilator
RU: Back pack (Cabinets)
RI(V): only 230 Volt

Compressor designation
for internal purposes

Compressor cooling unit BD 35 F

Product description:
The split cooling unit with a plate evaporator BD 35F is mainly suitable for existing cool boxes or refrigerators in boats (the evaporator is bent with a radius of 50 mm). Instead of the plate 0:42 there is also another possible plate on the next page. Suitable for cooling volume up to 120 liters.

Technical specifications:

Cooling volume of	80 Liters
Vehicle battery connector	12/24 V, optional 230 V
Cable length	1,5 Meter
Power consumption	Depending on the housing
Maximum input	70 W
Cooling capacity -10°C Cc	93 W
Refrigerant Quick couplings	
Compressor	Danfoss BD 35 F
Aggregate dimensions W x D x H	150 x 280 x 180
Evaporator dimensions W x D x H	250 x 350 x 12

Article name	Special feature	Article N°	Euro CHF
12VIVBD35KU0.42	12V 24 V	561400	738.-
Options:			
A with priority circuit 230V		103502	120.-
LL Longest cooling line		581110	189.-
Equipment:			
Aggregate mounting bracket		592300	65.-

Plate heat exchanger (PT Roll Bond Evaporator)

Standard plate evaporators are hot pressed in a mold made of two aluminum connected sheets. The conduit is welded and lacquered usually in white. They are produced in large quantities. This plate evaporator can be on U, L or also O shape with a radius of 50 mm. When choosing the plate, it should be as large as possible. The power per area should be less than 500W/m².

For example: Evaporator 02 with 385 x 380 mm = 146300 mm² times 2 pages = 292600 mm²
Comes up to: 0.2926 m² x 500 Watt = 146 Watt of maximum cooling capacity
To be used as the BD1.4 (Micro), BD35, BD60. The BD80 are way too strong.
Cooling capacity see page 79.






Artikelbezeichnung	Masse	Euro CHF
Plate heat exchanger 0.31	293 x 215 mm	102.-
Plate heat exchanger 0.32	385 x 380 mm	102.-
Plate heat exchanger 0.33	585 x 345mm	152.-
Plate heat exchanger 0.36	1220 x 280mm	127.-
Plate heat exchanger 0.37	950 x 230 mm	137.-
Plate heat exchanger 0.38	350 x 350 mm	122.-
Plate heat exchanger 0.41	762 x 230 mm	167.-
Plate heat exchanger 0.42	350 x 250 mm	109.-
Plate heat exchanger 0.43	480 x 450 mm	229.-
Plate heat exchanger 0.46	585 x 210 mm	117.-

Bent plate heat exchanger (L-Evaporator)

Standard plate evaporators bent in an L shape. The fitting angle plays no role; they can also be mounted upside down.

0.22

Article name	Mass	Euro CHF
L-Evaporator 0.22	W x D x H 370x90x280 mm	109.-
L-Evaporator 0.23	W x D x H 270x70x270 mm	109.-
L-Evaporator 0.26	W x D x H 230x330x220 mm	109.-
L-Evaporator 0.27	W x D x H 340x450x270 mm	171.-

Compressor cooling angle memory

Product description:
The split cooling unit with angle memory is mainly suitable for existing cool boxes in boats. Thanks to the memory it can cool further even during the day without land connection.

Technical specifications:

Cooling volume of	120 Liters
Vehicle battery connector	12/24 V, optional 230 V
Cable length	1,5 Meter
Power consumption	Depending on the housing
Maximum input	70 W
Memory performance	100 W/h
Aggregate dimensions W x D x H	150 x 280 x 180
Evaporator dimensions W x D x H	230 x 330 x 220

Article name	Special feature	Article N°	Euro CHF
12VIVBD35KU 0.02	Angle memory	563100	995.-
Options:			
A with priority circuit 230V		103502	120.-
LL Longest cooling line		581110	189.--
Equipment:			
Aggregate mounting bracket		592300	65.-

Stainless steel cold storage memory

Cold storage fully welded into stainless steel. Lying inside a copper coil for optimum heat transfer. The memory plates are filled with brine having a melting point of -11°C. Thus these plates are ideal for refrigerators and freezers.

0.05

0.06

0.07

0.08

Article name	Mass	Capacity	Euro CHF
Angle memory 0.02	BxTxH 230x330x220	100 W/h	218.-
Stainless steel memory 0.05	BxTxH 275x60x280	158 W/h	515.-
Stainless steel memory 0.06	BxTxH 325x60x280	230 W/h	625.-
Stainless steel memory 0.07	BxTxH 325x70x305	550 W/h	709.-
Stainless steel memory 0.08	BxTxH 355x70x325	700 W/h	772.-

Compressor cooling unit Micro BD 1.4

Product description:
The smallest cooling unit currently on the market.
With the dimensions of 130 mm wide, 260 mm long and 120 mm high, it is equipped with a static cooler very quiet and compact.

Technical specifications:

Cooling volume of	80 Liters
Vehicle battery connector	12/24 V
Power consumption	Depending on the housing
Maximum input	50 W
Refrigerant quick couplings	Option
Compressor	Secop BD 1.4 F
Refrigerant	R 134a
Aggregate dimensions W x D x H	130 x 260 x 120

Article name	Special feature	Article N°	Euro CHF
Unit without evaporator or refrigerants for cooling companies			
12KOSBD14SA	12/24Volt	532814	582.-
Unit without evaporator and with couplings			
12KOSBD14KU	12/24Volt	532815	727.-
Unit with couplings and evaporator 0.42			
12KOSBD14KU 0.42	12 /24 Volt	532842	836.-

Bent plate heat exchanger in O shape

Standard plate evaporators bent in an O shape. The so-formed compartment can be used as a freezer, -5°C. The O-Evaporator can also be mounted standing up with the opening towards the top.

0.12

0.16

Article name	Mass	Euro CHF
O-Evaporator 0.12	BxTxH 355x240x130 mm	101.-
O-Evaporator 0.16	BxTxH 250x210x90 mm	163.-

Compressor cooling unit BD 220

Product description:
We use the cooling units BD 220 with our transCooler 8/25.
We supply the aggregates as individual components.

Technical specifications:

Cooling volume of	3000 Liters
Vehicle battery connector	12 Volt
Cable length	1,5 Meter
Power consumption	Depending on the housing
Maximum input	315 W
Cooling capacity Cc -10°C	439 W
Refrigerant quick couplings	
Compressor	Secop BD 220
Aggregate dimensions W x D x H	150 x 280 x 180
Evaporator dimension W x D x H	210 x 225 x 75

Article name	Special feature	Article N°	Euro CHF
Unit without evaporator or refrigerants for cooling companies			
12VIVSBD220SA	12 Volt	532900	1236.-
Unit without evaporator and with couplings			
12VIVBD220KU	12 Volt	532910	1382.-
Unit with couplings and evaporator 0.78			
12VIVBD220KU 0.78	12 Volt	532978	1772.-

Forced ventilation evaporator

For the units with the BD220 compressor performing evaporators are needed.
Available as wall or ceiling evaporator.
There are also the disks 0.07 and 0.08 that can be used, see page 85.

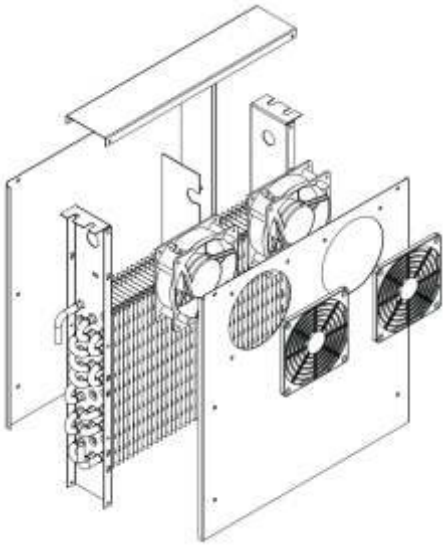

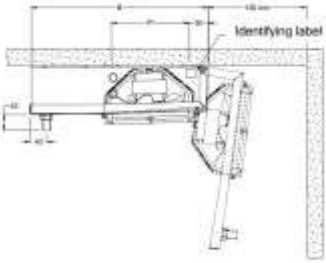

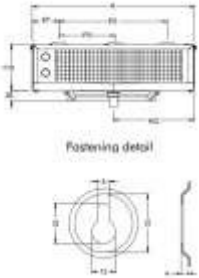

Article name	Code	Euro CHF
Wall evaporator RM 70	0.70	682.-
Ceiling evaporator RS	0.75	709.-
Static evaporator ST80	0.78	390.-

Refrigerant in Changing Times

Everything was much simpler: When I was in training in 1984, there were 3 refrigerants R12, R22, R502 for cooling, air conditioning and freezing. To empty a system it says: You use a garden hose or a disused fire hose and guide everything to the outside.
Yes that was once.
Then the ozone hole and CFCs (chlorofluorocarbons) got banned, although the refrigeration industry has not even consumed 8% of the CFCs. The largest part went into the atmosphere through propellant gases and cleaning agents.

Because the chlorine was involved in the ozone layer destruction, men went over to HFC (hydro fluorocarbon). The HFCs have a global warming potential and certain categories should be immediately prohibited. One should only use natural refrigerants:

For example: CO2 (carbon dioxide)
Here are pressures up to 80 bars in the system, which is technically more difficult to construct.

For example: NH3 (ammonia)
Ammonia attacks ferrous metals like copper winding of the motor.

So we come to the good old days when life was so hard that we had to soak this bread for 3 days in Lake Constance before we could eat it. For it is only in 1928 that CFCs were discovered and R12 propagated as the safety refrigerant. Back when everything was much better, refrigerants have indeed been used: natural refrigerants such as what we use today again:

R600	Butan	C4H10
R600a	Isobutan	C4H10
R290	Propan	C3H8
R170	Ethan	C2H6

These natural gases are HCs (hydrocarbons). As we know from chemistry class, burning coal (carbon) and hydrogen. And the chemical compound burns excellently.
In an optimum explosion, I mean during the combustion, it is just water with carbon dioxide (carbonic acid).

WEMO has all these refrigerants in stock.

Power supplies with priority circuit

To operate a DC load (compressor refrigerator) with 230 V, use a power adapter. This power supply should startup the compressor performance. Just an old power supply no longer used for mobile phone with 12 V is not enough. The power supply must also provide smoothed DC current and at idle the open circuit voltage must not exceed 17 V (32 V): Then the Danfoss compressors do not start at overvoltage. When the compressor starts, the voltage must not drop below 11 V, otherwise the compressor turns off due to low voltage.

So: A power device that has a still working old BD 2.5F (older than 15 years) is no longer enough for the compressor BD 35 F.

Also a battery charger that supplies 12V is apparently not enough to start a compressor.

To operate the consumer with 12V and 230V, the power supply is connected upstream of a relay - a priority circuit, so that when connecting the 230 V AC power, the relay switches off the 12 V power and the compressor is powered by the AC power. WEMO uses an automotive relays, as manufactured in thousands.
Power supply cannot be used for charging the battery: This leads to overheating and total failure of the battery.

Connection scheme

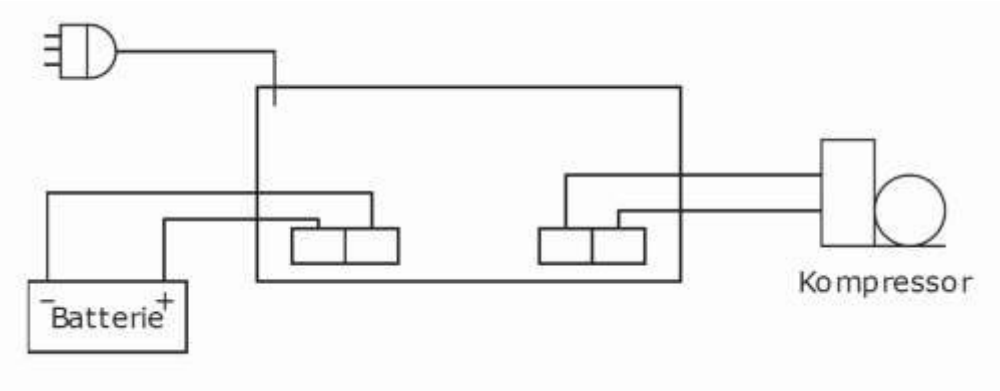

Power supply unit with priority circuit 12 volts

Product description:
The power supply unit DR 120-120 with priority circuit is suitable for all 12 volt cooling devices up to 80 watts power consumption. It is ideally suited for caravans, boats, yachts and readiness medical and fire vehicles. It has a robust metal housing.
It is mounted on a DIN rail or by fastening base plate. The connection is via large screw clamps for 4 mm² cables.

Technical specifications:

Output power of	120 W
Input voltage AC	180 to 250 V AC
Input voltage DC	12 Volt DC
Output voltage	13 Volt DC
Control range	12-15 Volt
Output current	10A
Reverse voltage protection	Yes, with auto-reset
Thermal protection	Yes, with auto-reset
Overvoltage protection	Yes, with auto-reset
Storage temperature	-25°C to +70°C
Weight	0.750 kg
Mass W x D x H	65 x 130 x 110

Article name	Special feature	Article N°	Euro CHF
Power supply unit DR 120-120	with priority circuit	406810	181.-
Similar model for	24 volt		
Power supply unit DR 24-120	with priority circuit	406815	181.-

Power supply unit with priority circuit 24 volts 240 Watt

Product description:
The power supply unit DR 24-240 with priority circuit is suitable for all cooling devices up to 180 watts power consumption. Compressors BD 80 and BD 120.
It is ideally suited for caravans, boats, yachts and readiness medical and fire vehicles. It has a robust metal housing.
It is mounted on a DIN rail.
The connection is via large screw clamps for 4 mm² cables.

Technical specifications:

Output power of	240 W
Input voltage AC	180 to 250 V AC
Input voltage DC	24 Volt DC
Output voltage	27.5 Volt DC
Control range	23-30 Volt
Output current	10 A
Reverse voltage protection	Yes, with auto-reset
Thermal protection	Yes, with auto-reset
Overvoltage protection	Yes, with auto-reset
Storage temperature	-25°C to +70°C
Weight	1.20 kg
Mass W x D x H	126 x 126 x 110

Article name	Special feature	Article N°	Euro CHF
Power supply unit DR 24-240	with priority circuit	406250	227.-

Power supply unit HRP 600-12 with 600 Watt

Product description:
The power supply unit HRP 12-600 is for the BD aggregates having the compressor 220 and determines the large transCoolers.
The connection from the battery and from the compressor is via a plug that could perform up to 50 A.
See page 122.

Technical specifications:

Output power of	600 W
Input voltage AC	180 to 250 V AC
Input voltage DC	12 Volt DC
Output voltage	13.5 Volt DC fix
Control range	10 Volt
Output current	10 A
Reverse voltage protection	Yes, with auto-reset
Thermal protection	Yes, with auto-reset
Overvoltage protection	Yes, with auto-reset
Storage temperature	-25°C to +70°C
Weight	1.50 kg
Mass W x D x H	218 x 105 x 64

Article name	Special feature	Article N°	Euro CHF
Power supply unit HRP 600-12	with priority circuit	408650	272.-

Battery chargers

Properly storing the battery will grant it with a long life. Avoid excessive voltages when charging the battery. The chargers listed here charge the battery with an IUOU characteristic. This means with a constant charging voltage and a float charge of 13.8 V. When a load is connected, the charger buffers according to the energy required from the consumer. If a 12 V battery with six cells gets a cell-circuit (short-circuited in a cell), it has only five cells of 2 V, which means that the battery has only about 10 V of voltage. For the charger this battery is empty and it will charge at full capacity, which can overheat the battery. We therefore recommend mounting a temperature sensor to the battery that turns off the charger in time.

Starter and supply batteries are designed for different tasks: starter batteries will deliver a big power to starting the engine and then act as an energy buffer with small sub-cycles. Supply or onboard batteries are discharged by contrast, through smaller currents over long periods and then reloaded, and are subject to a much greater load. Thus the optimum charging technology takes on a special importance. With the IUOU chargers we offer the optimum charging technology for supply batteries like gel, AGM and wet batteries. Basically, the withdrawn capacity should be replaced again by instant full charge. Even after a long journey involving the alternator it still applies: Battery to the power supply and load! How much must be a battery charged depends on the battery capacity. General rule: the charging current of the charger should be at least 10% of the battery capacity in Ah/h. Or the double of which is connected to the permanent consumer.

Performance and a high potential comfort characterize this proven series. The IUOU chargers are designed for use in mobile homes, caravans and boats. Double-or triple-loaders are suitable for simultaneous charging of several separate batteries.

Silent work in "sleep mode" function, remote control and temperature sensor are accessories.

Available in various capacities for 12V and 24V batteries.

Battery charger MSC 4012 40 A / 12 Volt

Battery charger MSC 6012 60 A / 12 Volt

The alternative to refrigerated vehicles

TransCooler is not only for cooling and refrigerated transport, but also tempered transport is now possible through the increased appearance of temperature-sensitive goods such as paints, adhesives, flowers, high quality chocolate products and drugs that need to be transported free of frost or at room temperature. The TransCoolers are now equipped with a heater that prevents undesired lowering of the internal temperature at lower than outside temperatures and drops below the set temperature.
Thanks to the simple connections of the TransCooler, it can be used in different vehicles. To give just one, a big 12V cable must be installed directly from the battery in the vehicle. Even with a change of vehicle TransCooler can be removed with little effort and reassembled, which pays for courier and delivery vehicles with high driving performance.
Further, in a refrigerated vehicle with an additional TransCooler partially frozen goods are transported without great expense. Even in simple transporters, such as the ones used for the parcel service, room temperature, refrigerated or frozen temperatures can be achieved.
The low weight compared to a fixed expansion increases the payload.
The maintenance costs are identical with a fridge, and massively less compared to a refrigerated vehicle.
Due to the different supply voltages (12 V, 24 V and 230 V) TransCooler could be used in passenger cars, in trucks or operate as a small cold store operating on AC power.
A cost-effective and flexible solution: The ideal alternative to compliance with closed cooling chain without special refrigerated vehicles. Whether for deliveries, courier services, catering, retail butchers operation, etc.: The acquisition and maintenance costs are a fraction of those of a refrigerated vehicle.

More info in www.transcooler.ch or www.transcooler.de

TransCooler - Questions and Answers

How does a transCooler operate?
For a domestic use it needs 230 V or over 110 V from normal household socket. In the vehicle via 12V or 24V, directly from the battery.

Can I connect both cables and what will happen?
Yes, it will run at the higher voltage.

Can a transCooler be operated from the cigarette lighter socket?
No, most of the cigarette lighter sockets which are mounted in vehicles are not even suitable for the operation of a small cooler, because the power supply is very poor. A separate cable must be drawn with the appropriate connector for the operation of the transCooler. We recommend a cable cross section of 6 or 10 mm².

What is the cost of installing a transCooler?
It is strapped in the vehicle with tension belt, as seen there are no installation costs. It must only be fed by the power cable.

What is the cost of the cable installation?
Our mounting kit with cable, connector ferrules, fuse, fuse holder and straps is CHF 169 - (€ 153 -), but this is without the transCooler. The installation without material by a specialist workshop, the Bosch service or a car electrician takes about 1.5 hours and costs CHF 150.- (Euro 136.-). For collection in at our factory in Schlatt TG we charge CHF 148 - complete.

How is the cable attached?
With a fuse directly from the battery under the carpets and external trim in the trunk / cargo area.

Can the transCooler also be installed in an existing vehicle?
Yes.

Can the transCooler also be installed in a leasing vehicle?
Yes, there are no changes made in the vehicle except for the cable. Brief inquiry call for the Authorized Repair Facility.

How long can a transCooler be connected to a battery?
The transCooler 8 requires an average of 10A from the battery. In general, only 50% of the battery power will be consumed. Thus, the cooling system cools at an 80-Ah (ampere-hours) battery within four hours:
80Ah-50% = 40Ah : 10 A = 4 Hours.
The transCooler TK 8 and 25 have double power consumption, so only two hours as time operating in mid-summer at full load.

What happens when the car is heated up in the sun to +60°C?
The controller turns off at 70°C. The unit starts to over-clocking, and the temperature cannot be maintained over long periods of time. At a filling rate of 50%, the transCooler will warm by 0.7°C per hour.
For deep freezing it is around 3 ° C.
However, it must be said that 60°C may occur only in the afternoon at a standstill, closed car. In a moving car without air conditioning this temperature is above 35°C.

What about HACCP?
The temperature compliance is better than with conventional cooling equipments owing to the fact that at a transCooler the compressor continues to work when the motor is switched off. From a hygiene perspective, the chrome steel provides the best conditions to nature.

Data recording?
Up to 1000 liters you are not generally required for data recording.
But mostly this is integrated into an overall concept of operations through mobile logger on the goods. With location, see page 109.

What about the cleaning?
The transCooler 8/25 inside and outside are made of stainless steel. Cleaning can be done indoors as well as outdoors with a pressure washer or steam cleaner; but it should be noted that the indoor fan and the compressor unit are not directly hosed.

Can the transCooler also be operated in a refrigerated vehicle, for a different temperature range?
Yes, without any problem, because there is so little heat coming from the transCooler that it can be removed from the vehicle cooling system easily.

Can a normal transCooler 8 are also used for low temperatures?
Yes, at low outside temperatures and with frozen food. It is important to note, however, that the transCooler is not equipped with defrost and this should also be an exception.

How can the transCooler be set to a different temperature?
Via the temperature control (three buttons).

Is a second battery required?
For normal transport operations it is not. If in between long periods only shorts distances occur to be driven, then a second battery or a larger battery would be an advantage.

Does an under-voltage protection have to be installed, so that the battery is not discharged too deeply?
In all transCooler devices, an under-voltage protection is mounted as standard equipment. The cooling unit automatically turns off at 10.5 V.
In the heating versions under-voltage protection is not provided.

How is the transCooler loaded on?
With the four carrying handles (transCooler 8) the refrigerator can be easily loaded on the vehicle by two men; when loading by a single person use a car or a forklift. The transCooler 25 should be loaded with four men or with the help of a forklift truck.

How heavy is a transCooler?
See information in the catalog.

How is the transCooler mounted in the vehicle?
With straps attached to the existing fixing lugs on the vehicle floor. It is also recommended to have a locking rod that is attached to the front of the TransCooler. For this purpose, the recommendations of the best transportation networks over charge protection are to be observed.

Can the transCooler be operated outside the vehicle?
Yes.

Can the transCooler stay outdoors?
Yes, it is best to be under a roof, although rain cannot harm the cooling device. But it should not be exposed to splashing or spraying water.

How many door openings can be made per hour?
Three to four doorways of one minute per hour.

How is the heat dissipated?
Into the vehicle interior, almost as much warmth as what two front seat passengers deliver.

Can tray or shelf supports be introduced into the transCooler?
Not in the models from 200 to 400. In the transCoolers 8 and 25 a shelf support can be bolted or riveted on the inside wall.
Or see page 111.

Can anything be screwed?
In transCoolers 8/ 25:
Inside of the side walls, at the bottom, but not at the rear wall and the roof. Being located behind the chrome steel cooling coil, if this is drilled, the transCooler will be totally damaged.
On the outer wall screws can be placed anywhere, better blind threaded rivets. On the back wall only 15-mm screws may be used. When drilling, make sure that the drill does not penetrate the insulation for more than 15 mm.
In models from 200 to 400, the screws and drilling are prohibited, as these devices have an outer skin liquefier.

What is an outer skin liquefier?
The wasted heat from the cooling system is discharged through a pipe system, which is glued under the outer panel. This also means that the outer panel (outer skin) becomes warm during operation.

Where is the condensation water derived from the cooler?
In models from 200 to 400 it remains in the interior. In the transCoolers 8/25 the condensation water is passed into a shell evaporator where it evaporates by the heat of the compressor.

Can TransCooler also be rented?
Some are demonstration models in stock, many others are also available.

What is the life expectancy of a transCooler?
We expect ten years of useful life.

Can the transCooler be installed in a new vehicle, and what expenses should be expected?
Yes. You need a new connection cable or to extend and retract the cable already existing in the new vehicle; then the transCooler can be transferred to another car. The biggest expense is the collection of the cable. This effort takes about 1.5 hours.

What are the maintenance intervals of the transCoolers?
Hardly: Normal cleaning. Blow out the condenser (heat exchanger) in the compressor. Check the electrical connections two a year.

Can the transCooler also warm up?
The H option is enabled to +35°C. The ongoing field trials up to +70°C are promising.

Why is the door frame made of chrome-plated steel, not plastic? This is a thermal bridge!
The first devices had a frame made of PVC, which overlapped the chrome steel. This overlap was mostly demolished during unloading of heavy boxes. The heat transfer through the chrome steel is relatively low.

What is the difference between the transCooler 8 and the transCooler 8 TK?
The transCooler 8 TK has a much greater cooling capacity. It has 2 separate cooling systems and cooling coils mounted in the roof.

What is the target clientele of the transCoolers?
Refrigerated goods to be transported with small vehicles, because the use of a 3.5 ton vehicle is not expected.

By whom is the transCooler used?
Courier services with very high mileage on the vehicles, e.g. also for post and express deliveries.
In the baking industry, where only a portion of the goods is cooled, e.g. sandwiches and warm bread.
For small butchery businesses.
In food distribution systems (Meals on Wheels).
The 200 model comes mainly for field representatives using frozen food, but also for transport of the chemical and pharmaceutical industry.

I want a transCooler for example 50 mm higher (special mass)?
The transCoolers are all custom-made. For a special construction new tools are needed, which cost several times the price of a transCooler. Thus, a special construction is financially interesting only with an order starting from 150 pieces.

Why a transCooler and not a conventional refrigerated vehicle?
For economic reasons! The transCooler costs about 10 000 CHF, a refrigerated vehicle 25 000 CHF. It requires little maintenance, no ongoing costs, has higher resale value of the base vehicle, much longer life, higher payload, since the transCooler is much lighter than a standard expansion.

Is there even bigger transCoolers, for example for a 3.5 tons vehicle?
No, because the power supply in a standard vehicle is not sufficient. It would no longer be hand-loaded in this size.

TransCooler 200

Product description:
The transport refrigeration unit transCooler 200 fits in any station-wagon and is suitable for refrigerated and frozen food. An outside-readable digital thermostat permanently displays the outdoor temperature.

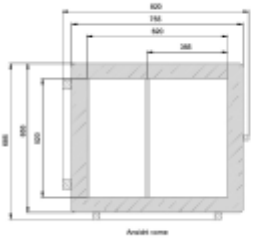

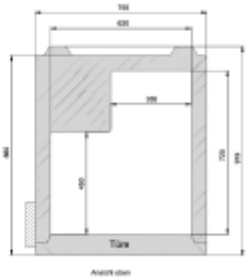

Technical specifications:

Cooling volume up to	199 Liter
Vehicle battery	12V 24 V
Mains connection	110/230 V
Adjustable temperature range	+20°C bis -25°C
Power consumption	120 W
Compressor	Danfoss BD 80
Weight	47 kg
Dimensions W x D x H	755 x 880 x 685
Included in delivery:	TransCooler Car Connection Set

Article name	Special feature	Article N°	Euro CHF
TransCooler 200	12/24/110/230 V	652165	2886.-

Accessories:

Transcooler Car connection kit for a second vehicle	652152	162.-

TransCooler 300

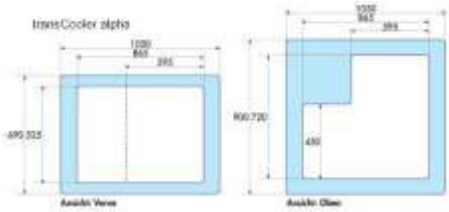

Product description:
The transport refrigeration unit transCooler 300 fits great in older station wagons (picture: Opel Omega). The newer models that are sportier, do not offer enough space for the transCooler 300. However, it fits in many vans.

Technical specifications:

Volume net	284 Liter
Vehicle battery	12V 24V
Mains connection	110/230 V
Adjustable temperature range	+20°C bis -35°C
Power consumption	120 W
Cooling time +20°C to 0°C	25 Min
Cooling time +20°C to -18°C	70 Min
Lowest temperature at 32°C	-24°C
Lowest temperature at 43°C	-13°C
Compressor	Danfoss BD 80
Weight	51 kg
Dimensions W x D x H	1040 x 920 x 680

Included in delivery: TransCooler Car Connection Set

Article name	Special feature	Article N°	Euro CHF
TransCooler 300	12/24/110/230 V	653165	2995.-

Accessories:

Transcooler Car connection kit for a second vehicle	652152	162.-

TransCooler 210

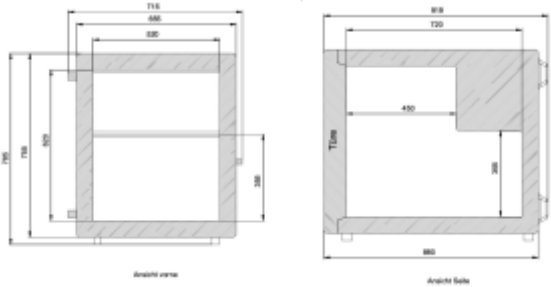

Product description:
The transport refrigeration unit transCooler 210 fits in the back of vans, sometimes in small vans from the side. It is suitable for refrigerated and frozen food. An outside-readable digital thermostat permanently displays the outdoor temperature.

Also possible to use in a refrigerated vehicle as a small apartment for frozen food

Technical specifications:

Volume net	199 Liter
Vehicle battery	12V 24V
Mains connection	110/230 V
Adjustable temperature range	+20°C bis -35°C
Power consumption	150 W
Cooling time +20°C to 0°C	17 min
Cooling time +20°C to -18°C	48 min
Cooling time +20°C to -30°C	103 min
Lowest temperature at 32°C	-28°C
Lowest temperature at 43°C	-21°C
Compressor	Danfoss BD 120
Weight	47 kg
Dimensions W x D x H	715 x 920 x 785

Article name	Special feature	Article N°	Euro CHF
TransCooler 210	12/24/110/230 V	654165	2794.-

Accessories:

Transcooler Car connection kit for a second vehicle	652152	162.-

TransCooler 310

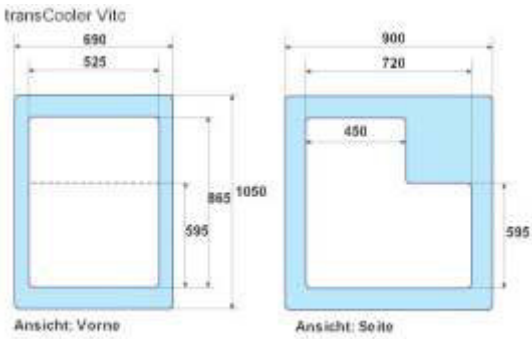

Product description:
The transport refrigeration unit transCooler 310 fits with the side door of minivans, but also for small vans with a rear door (picture: Berlingo). It is suitable for temperature-controlled transport of refrigerated and frozen goods.

Technical specifications:

Volume net	298 Liter
Vehicle battery	12V /24 V
Mains connection	110/230 V
Adjustable temperature range	+20°C bis -35°C
Power consumption	150 W
Cooling time +20°C to 0°C	16 min
Cooling time +20°C to -18°C	43 min
Cooling time +20°C to -30°C	103 min
Lowest temperature at 32°C	-24°C
Lowest temperature at 43°C	-18°C
Compressor	Danfoss BD 120
Weight	52 kg

Article name	Special feature	Article N°	Euro CHF
TransCooler 310	12/24/110/230 V	655165	3064.-

Accessories:

Transcooler Car connection kit for a second vehicle	652152	127.-

www.SFtelematik.de

www.transcooler.ch
www.transcooler.de

Where is my transCooler?
What is the temperature?
For how long was the door open?
How long was the residual capacity of the battery?
What was the temperature history on Tuesday 3 weeks ago?

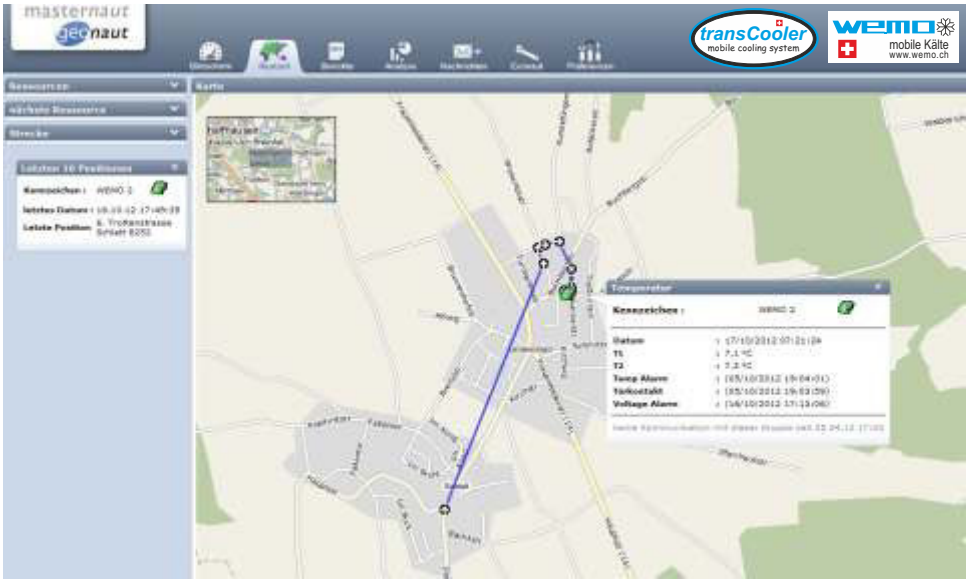

TransCooler 8

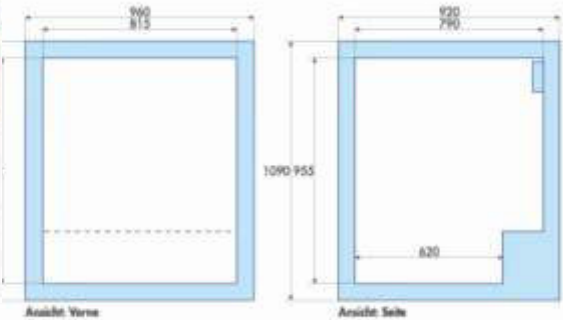

Product description:
The transport refrigeration unit made entirely of stainless steel transCooler 8 can accommodate eight E2 boxes and fits into any small delivery van. The control system with digital temperature display can be installed by the driver, so he has the temperature under control.

Technical specifications:

Cooling volume up to	562 Liter
Vehicle battery	12V 24 V
Mains connection	110/230 V
Power consumption	300 W / TK 560 W
Compressor	Danfoss BD 220
Weight	86 kg
Dimensions W x D x H	960 x 930 x 1090
Included in delivery:	TransCooler Car Connection Set

Display

Article name	Special feature	Article N°	Euro CHF
TransCooler 8	+10°C bis +2°C	620100	7709.-
TransCooler 8 TK	+10°C bis -25°C	620130	8885.-
TransCooler 8 H	+25°C bis +2°C	620160	8673.-

Accessories:

Transcooler Car connection kit for a second vehicle	652152	162.-

Options for transCooler 8

Stainless steel shelf
Frame for the reception of 8 Euro boxes E2, which can be used as separations. The frame is inserted into the transCooler 8 and can be disassembled without tools.

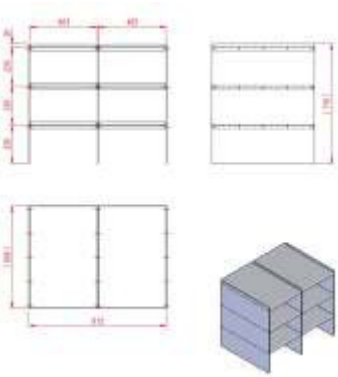

ACOS structure
The 280 Ah batteries, charger, controller, main switch are in sturdy structure. Battery capacity display and space for the telematic provided by Masternaut on page 109.
To the reach of the operator, the door must be opened.

The **ACOS** (**A**utonomous **Co**ntainer **S**ystem) has an autonomy of 100 hours without power supply.

TransCooler on feet
For floor conveyors logistics in the freight forwarding transport with trucks and forklifts. They are about 20 mm below the outer contours.

Article name	Special feature	Article N°	Euro CHF
Shelf in stainless steel for 8 E2 boxes		620110	954.-
ACOS - structure for transCooler 8		620160	1394.-
TransCooler feet for 8/25		620165	500.-

TransCooler 25

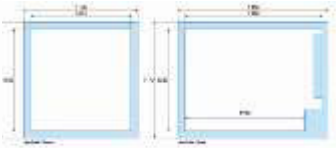

Zeichnung unter
www.transcooler.ch

Product description:
The transport refrigeration unit made entirely of stainless steel transCooler 25 can accommodate 25 E2 boxes and fits into any small delivery van. The control system with digital temperature display can be installed by the driver, so he has the temperature under control.

Technical specifications:

Cooling volume up to	1445 Liter
Vehicle battery	12 Volt 24 Volt
Mains connection	110/230 Volt
Power consumption	300 Watt TK 560 W
Compressor	Danfoss BD 220
Weight	125 kg
Dimensions W x D x H	1160 x 1530 x 1170
Included in delivery:	TransCooler Car Connection Set

Display

Article name	Special feature	Article N°	Euro CHF
TransCooler 25	+10°C bis +2°C	620300	9636.-
TransCooler 25 TK	+10°C bis -25°C	620330	12720.-
TransCooler 25 H	+25°C bis +2°C	620360	10455.-

Accessories:

Transcooler Car connection kit for a second vehicle	652152-2	162.-

The absorption cooling system

Operating principle
The absorption cooling system can be operated with 12V battery power, 230 V electricity, gas or other heat source.

The absorption refrigerator uses a water / ammonia mixture. It makes the ammonia and the water boil by heating (Gas flame, electric heating, solar heat...). By this supply of heat the whole cooling system comes in motion. In the overlying boiler tube or expeller the mixture is separated (ammonia is stripped from the water). Thereafter, the liquid water and the gaseous ammonia are passed through various duct systems.
The ammonia is liquefied in the condenser. This is the uppermost part of the cooling unit. Here the heat is given from the refrigerator. With the drop ammonia flows into the evaporator (cooling element) in the refrigerator. By evaporation the ammonia takes up heat. By removing the heat it will be less warm in the fridge. The gaseous ammonia is then absorbed again by the water, cooled and then discharged into the boiler tube.

The advantages of the absorption cooling system are
Absolutely silent
Operation with a heat source, e.g. gas or kerosene, simply possible
No moving parts
Maintenance-free
Self-regulating
No complex components, consists of a simple pipe system

The disadvantages of an absorption cooling system
Poor efficiency (3 to 5 times worse than compressor cooling systems)
Starting from 35°C of outside temperature there is barely more efficiency
Inclined position sensitivity
Motion sensitivity
Defined structure, difficult construction and design

Usage
The operating gas is in the foreground. Operation with 12 V should be omitted if possible and the operation of a solar system should be banned. Because energy consumption is several times higher than in the compressor fridge. For gas operation, a 10-kg bottle holds about a month.

On the following pages you will find various absorption cooling units with gas. Further absorbers are delivered as silent mini-bars and living room refrigerators.

Zulassung Bestätigt

Absorption cool-box WEMO EZ 4000

Schweizerischer Verein des Gas und Wasserfaches
Vorgang: M122

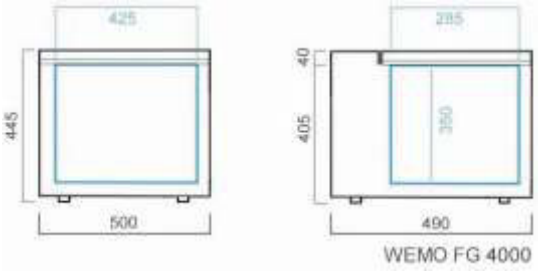

Product description:
The WEMO EZ 4000 is the favorite among the absorption cool-boxes. With its 40 liter capacity, it is the ideal companion for any camping trip, and also with its gas mode in every isolated cabin in the woods or in any allotment garden.

Technical specifications:

Net capacity	40 Liter
Vehicle battery connector	12 V
Mains voltage connection	220 V bis 230 V ~
Propane / butane gas connection	50 mbar
Power consumption	70 W
Electricity consumption at 12V	5,85 A
Climate class	N
Gas consumption	320g / 24 h
Unpacked weight	16 kg
Packed weight	17,5 kg
Mass H x W x D	500 x 490 x 445

Article name	Special feature	Article N°	Euro CHF
WEMO EZ 4000	50mbar	201050	340.-
Connection kit for gas bottle	50 mbar	200050	55.-

Absorption refrigerator TR 5060

Zulassung Bestätigt

Schweizerischer Verein des Gas und Wasserfaches
Vorgang: M338

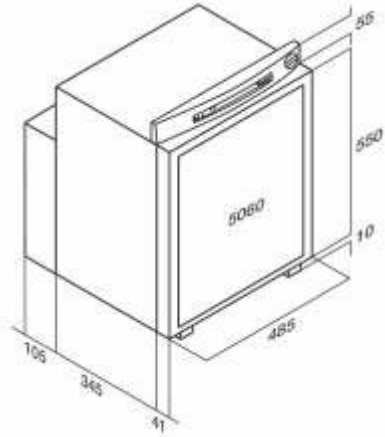

Product description:
The absorption refrigerator TR 5060 is designed to be installed, but it can also operate freestanding. For the operation of a gas bottle, a small 9-volt battery for the control and ignition unit is required.

Technical specifications:

Net capacity	51 Liter
Freezer compartment	6,9 Liter
Vehicle battery connector	12 V
Mains connection	230 V AC
Gas connection	30 mbar
Power consumption 230 V	95 W/h
Electricity consumption	110 W
Gas consumption per day	336 g/Tag
Weight	25,2 kg
External dimensions W x D x H	485 x 500 x 615
Niche depth	454 mm

Article name	Special feature	Article N°	Euro CHF
WEMO TR 5060		205060	1280.-
Ventilation grille for standard absorber		205065	101.-
Ventilation grille for absorber 2 fans 12V		205066	136.-
Connection kit for gas bottle 30mbar		200052	55.-
9V block battery holder		200054	11.60

Absorption refrigerator TR 5070

Zulassung Bestätigt

Schweizerischer Verein des Gas und Wasserfaches
Vorgang: M338

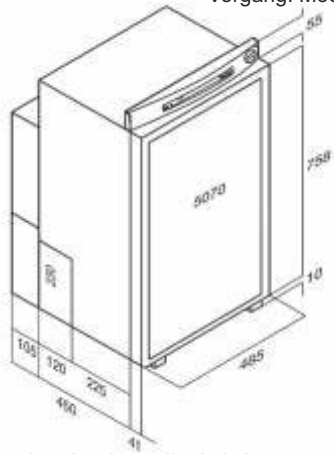

Product description:
The absorption refrigerator TR 5070 is designed to be installed. It has a so-called wheel well cutout. Thus, it can be mounted above the wheel arch in caravans.

Technical specifications:

Net capacity	61,5 Liter
Freezer compartment	8,3 Liter
Vehicle battery connector	12 V
Mains connection	230 V AC
Gas connection	30 mbar
Power consumption 230 V	95 W/h
Maximal electricity consumption	110 W
Gas consumption per day	229 g/Tag
Weight	28 kg
External dimensions W x D x H	485 x 500 x 823
Niche depth	454 mm

Article name	Special feature	Article N°	Euro CHF
WEMO TR 5070		205070	1588.-
Ventilation grille for standard absorber		205065	101.-
Ventilation grille for absorber 2 fans 12V		205066	136.-
Connection kit for gas bottle 30mbar		200052	55.-
9V block battery holder		200054	11.60

Absorption refrigerator TR 5075

Zulassung Bestätigt

Schweizerischer Verein des Gas und Wasserfaches
Vorgang: M338

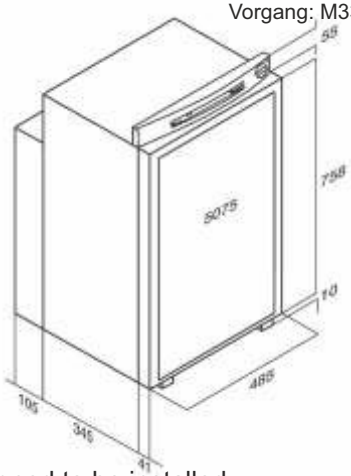

Product description:
The absorption refrigerator TR 5075 is designed to be installed.

Technical specifications:

Net capacity	72 Liter
Freezer compartment	8,3 Liter
Vehicle battery connector	12 V
Mains connection	230 V AC
Gas connection	30 mbar
Power consumption 230 V	80 W/h
Maximal electricity consumption	110 W
Gas consumption per day	245 g/Tag
Weight	28 kg
External dimensions W x D x H	485 x 500 x 823
Niche depth	454 mm

Article name	Special feature	Article N°	Euro CHF
WEMO TR 5075		205075	1600.-
Ventilation grille for standard absorber		205065	101.-
Ventilation grille for absorber 2 fans 12V		205066	136.-
Connection kit for gas bottle 30mbar		200052	55.-
9V block battery holder		200054	11.60

Absorption refrigerator TR 5080

Zulassung Bestätigt

Schweizerischer Verein des Gas und Wasserfaches
Vorgang: M338

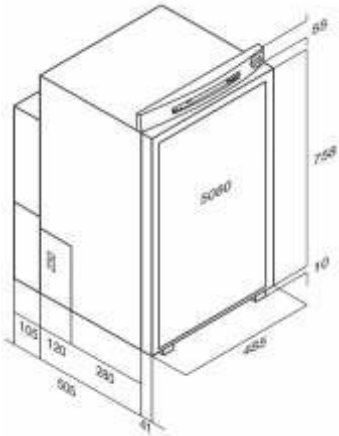

Product description:
The absorption refrigerator TR 5080 is designed to be installed. It has a so-called wheel well cutout. Thus, it can be mounted above the wheel arch in caravans.

Technical specifications:

Net capacity	74 Liter
Freezer compartment	11 Liter
Vehicle battery connector	12 V
Mains connection	230 V AC
Gas connection	30 mbar
Power consumption 230 V	95 W/h
Electricity consumption	110 W
Gas consumption per day	229 g/Tag
Weight	29 kg
External dimensions W x D x H	485 x 550 x 823
Niche depth	509 mm

Article name	Special feature	Article N°	Euro	CHF
WEMO TR 5080		205080-1	1445.-	1590.-
Ventilation grille for standard absorber		205065-1	92.-	101.-
Ventilation grille for absorber 2 fans 12V		205066-1	124.-	136.-
Connection kit for gas bottle 30mbar		200052-1	50.-	55.-
9V block battery holder		200054-1	10.55	11.60

Absorption refrigerator TR 5090

Zulassung Bestätigt

Schweizerischer Verein des Gas und Wasserfaches
Vorgang: M338

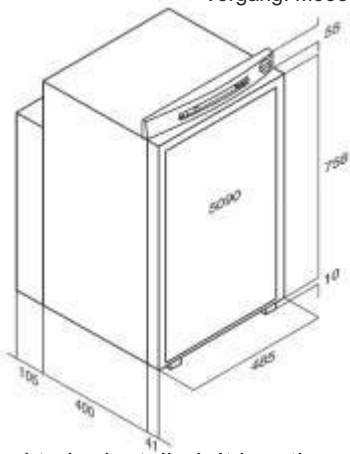

Product description:
The absorption refrigerator TR 5090 is designed to be installed. It has the same dimensions as the compressor fridge WEMO 85.

Technical specifications:

Net capacity	84 Liter
Freezer compartment	11 Liter
Vehicle battery connector	12 V
Mains connection	230 V AC
Gas connection	30 mbar
Power consumption 230 V	95 W/h
Maximal electricity consumption	110 W
Gas consumption per day	245 g/Tag
Weight	30 kg
External dimensions W x D x H	485 x 500 x 823
Niche depth	509 mm

Article name	Special feature	Article N°	Euro CHF
WEMO TR 5090		205090	1610.-
Ventilation grille for standard absorber		205065	101.-
Ventilation grille for absorber 2 fans 12V		205066	136.-
Connection kit for gas bottle 30mbar		200052	55.-
9V block battery holder		200054	11.60

Zulassung Bestätigt

Absorption refrigerator TR 5105

Schweizerischer Verein des Gas und Wasserfaches
Vorgang: M338

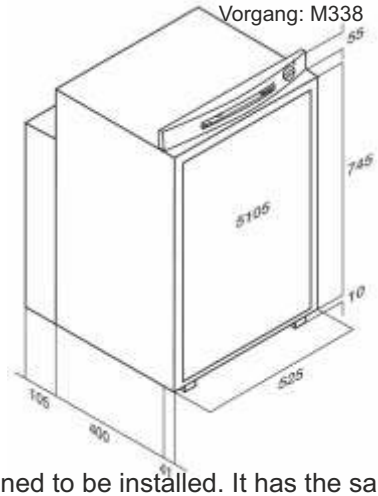

Product description:
The absorption refrigerator TR 5105 is designed to be installed. It has the same dimensions as the compressor fridge WEMO 96 or also the WEMO 106. But the unit has to be housed elsewhere in WEMO 106.

Technical specifications:

Net capacity	92 Liter
Freezer compartment	12,5 Liter
Vehicle battery connector	12 V
Mains connection	230 V AC
Gas connection	30 mbar
Power consumption 230 V	100 W/h
Maximal electricity consumption	110 W
Gas consumption per day	432 g/Tag
Weight	32 kg
External dimensions W x D x H	525 x 550 x 810
Niche depth	509 mm

Article name	Special feature	Article N°	Euro CHF
WEMO TR 5105		205105	1645.-
Ventilation grille for standard absorber		205065	101.-
Ventilation grille for absorber 2 fans 12V		205066	136.-
Connection kit for gas bottle 30mbar		200052	55.-
9V block battery holder		200054	11.60

Zulassung Bestätigt

Absorption refrigerator TR 5150

Schweizerischer Verein des Gas und Wasserfaches
Vorgang: M338

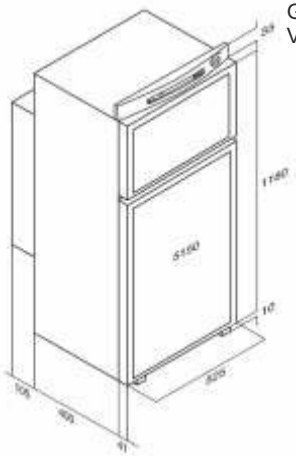

Product description:
The absorption refrigerator TR 5150 is designed to be installed. Thanks to its own freezer with two doors, it offers plenty of space. With a 9V battery block, it can also be operated with gas (the 9V are used for the electric ignition, so the 12V connection can be omitted). The battery life is about two years.

Technical specifications:

Net capacity	150 Liter
Freezer compartment	25,2 Liter
Vehicle battery connector	12 V
Mains connection	230 V AC
Gas connection	30 mbar
Power consumption 230 V	121 W/h
Maximal electricity consumption	190 W
Gas consumption per day	528 g/Tag
Weight	49 kg
External dimensions W x D x H	525 x 550 x 1215
Niche depth	509 mm

Article name	Special feature	Article N°	Euro CHF
WEMO TR 5150	150 Liter	205150	1875.-
Ventilation grille for standard absorber		205065	101.-
Ventilation grille for absorber 2 fans 12V		205066	136.-
Connection kit for gas bottle 30mbar		200052	55.-
9V block battery holder		200054	11.60-

Connector for DC 12 V / 24 V

DC-Connector:
It is a universal plug that fits into both the cigarette lighter socket as well as in the on-board socket. The on-board power connector is smaller and does spread over the entire surface contacts, thus it is much better suited for the DC plug than the cigarette lighter socket.

Article name	Specificity	Article N°	Euro CHF
Universal plug		401100	11.-
DC power plug		401090	8.-
On-board power connector		401040	9.50

Bosch adapter plugs:
The adapter plugs from Bosch are ideal for the connection from the cigarette lighter socket to the power connector.

Article name	Specificity	Article N°	Euro CHF
Bosh adapter plug		401120	34.-

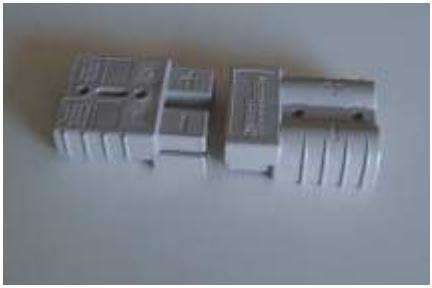

Industrial connectors:
Suitable for professional connection of 12V DC loads. For this plug male and female are identical. For a couple you need two of these industrial plugs. These connectors are also used for battery chargers for electric forklift trucks and are able to withstand the demands of freight forwarding halls.

Article name	Specificity	Article N°	Euro CHF
Industrial connector 50 A	1 piece	401200	21.-

Mechanical thermostats for 12V and 230V

Capillary tube thermostat:
Mechanical capillary tube thermostats are most commonly used in refrigeration equipment manufacturing. When installing the thermostat, the sensor probe must be attached to the first 5 cm of the evaporator plate.

Article name	Specificity	Article N°	Euro CHF
Cooling boxes thermostat	Box	510403	67.-
Cold accumulation thermostat	Tix	510407	67.-
Refrigerator thermostat	N	510401	67.-
Deep freezer thermostat	GT	510405	67.-

Capillary tube thermostat:
Mechanical capillary tube thermostat in a plastic case including a connection cable of 1.5 meters which is fixed on the cooling unit.

Article name	Specificity	Article N°	Euro CHF
Cooling boxes thermostat in housing		510423	90.-
Cold accumulation thermostat in housing		510427	90.-
Refrigerator thermostat in housing		510421	90.-
Deep freezer thermostat in housing		510425	90.-

Room Thermostat:
Mechanical room thermostat in which the temperature and the switching differential can be adjusted.
Control range from +15°C to -25°C

Article name	Specificity	Article N°	Euro CHF
Thermostat KP 61		510480	112.-

Eliwell Digital-Thermostat

Ic901:
The digital thermostat Eliwell IC901 is a simple thermostat that switches on and off. It is used in all refrigerators and freezer boxes and cabinets. The sensor probe can be extended as required. These digital thermostats can read from the outside, the internal temperature.

Article name	Specificity	Article N°	Euro CHF
Digital-Thermostat IC901	12/24 V	510460	160.-
Digital-Thermostat IC901	230 V	510465	160.-

IC 961:
Eliwell IC961 is a thermostat with a built-in defrost clock. It is used in all refrigerators that must be removed periodically. Eliwell ID974 has a fully integrated controller for freezer, with individual outputs for compressor, evaporator fan, defrost heater or hot gas valve.

Article name	Specificity	Article N°	Euro CHF
Digital-Thermostat IC961	12/24 V	510472	185.-
Digital-Thermostat ID974	230 V	510474	245.-

Ic915:
The digital thermostat Eliwell IC915 has two control outputs for heating and cooling. t is used for the control of climatic chambers or TransCooler H versions.

Article name	Specificity	Article N°	Euro CHF
Digital-Thermostat IC915	12/24 V	510476	329.-
PTC Sonde	1,5 Meter	510462	12.-

Ventilators

Ventilator block:
The ventilator block 120x120x25 mm (230 V and 8 W are 38 mm) for the cooling of refrigeration units.
Danfoss BD35 controls always use 12V fan, even when the compressor is connected to 24V.
The controller has a built-in voltage divider.

Article name	Special feature	Article N°	Euro CHF
Ventilator block120x120	12 V 4,2 W	501500	47.-
Ventilator block120x120	24 V 4,2 W	501501	47.-
Ventilator block120x120	230 V 4,2 W	601502	47.-
Ventilator block120x120	12 V 8 W	601503	47.-

Ventilator block:
The ventilator block 80x80x25 mm for additional ventilation of cooling units or as additional fan in large coolers, in conjunction with a plate evaporator.

Article name	Special feature	Article N°	Euro CHF
Ventilator block 80x80	12 V 3,5 W	601505	47.-
Ventilator blockr 80x80	24 V 3,5 W	601506	47.-

Electronic cooler
Fan for mounting on the cooling fins of the BD35 and BD50 controller.
Bracket included.

Article name	Special feature	Article N°	Euro CHF
Ventilator block 40x40	12 V	601508	55.-

Compressors – Secop BD 12V/24V

BD35F R134a:
The BD 35F is the most built compressor with up to 200 liters of useful volume. For the compressor to work, it still needs the appropriate control system.

Article name	Special feature	Article N°	Euro	CHF
Danfoss compressor BD 35 F 12/24 V		500170	Price on request	

OEM Pack BD 35F:
Original compressors fromDanfoss/Secop:
Since Secop only delivers pallets of 150 pieces, we offer small quantities.
12 compressors BD 35 F 101Z0200
12 control systems BD 101N0210
12 SnapOn fixation kits

We will gladly offer you other articles from our current production.

Article name	Special feature	Article N°	Euro	CHF
OEM Pack BD 35 F	12 Pieces	500183	Price on request	

Electronic control system – Danfoss Secop

Electronic control system – Danfoss:
Electronic control system for the Danfoss compressors BD 35F end BD50F for 12V/2V.
New: The AC / DC control for the BD35F and the BD0F for 12/24/110/230 Volt.

Article name	Special feature	Article N°	Euro/CHF
Control system BD35/50	101N0212	500280	156.-
Control system BD35/50	101N0500	500290	195.-

Electronic control system 4400 U./min:
An electronic Danfoss control system with 4400 U. / Min at maximum speed and built-in fan for the compressor BD 80 F.
Same control also for the BD 120.
If this control is also built on the BD35F, then it mutates into BD60F.

Article name	Special feature	Article N°	Euro/CHF
Control system BD80F	101N0290	500295	193.--

Old Danfoss control systems
Old control systems for the BD 2, BD2.5 and BD 3F.

The production of these compressors was stopped in 1997
Production ceased in 2004.
Only available while present in the stocks.
Fan for mounting on the cooling fins of the BD35 and BD50 controller.

Article name	Special feature	Article N°	Euro/CHF
Control system BD2,5/3 12 V	101N3033	500200	298.-
Control system BD2,5/3 24 V	101N4031	500250	298.-

Refrigeration Components

Filter drier:
Filter drier for repairs 3/16 "and 1/4" respectively inputs and output of the capillary tube.

Article name	Special feature	Article N°	Euro CHF
Filter drier ¼” – Cap		500511	14.50
Filter drier 3/16” – Cap		500513	14.50

Schrader valve:
Soldered Schrader valve for filling a cooling system. Soldered copper pipe soldered into 6 mm, length 60 mm including the valve core and cap.
6 mm refrigerant couplings:
Couplings for the separation of refrigerant lines.

Article name	Special feature	Article N°	Euro CHF
Soldered Schrader valve		500420	4.-
Refrigerant male coupling		500421	42.-
Refrigerant male coupling		500422	42.-

Refillable Cartridge
Refrigerant refill cartridge with a capacity of 100g.

Article name	Special feature	Article N°	Euro CHF
Refrigerant refill cartridge R134a		592134	85.-
Refrigerant refill cartridge R12		592012	85.-
Refrigerant refill cartridge R404a		592404	85.-
Filling only		592000	24.-

Cables and cable sets

Car connection cable:
Car-connection set for the connection of transport cooling turning out directly on the car battery with reasonable plugs and thick cable.

Article name	Special feature	Article N°	Euro CHF
Car-connection set E25/E35/E45 12/24 V		109553	108.-
Car-connection sett 65/41/TC 12/24 V		109551	108.-
Car-connection set for small transCoolers		652152	179.-
Car-connection set for transCooler 8/25		652153	179.-

230V cable:
230V cable with IEC plug on one side and Schuco or Schweizer T12 plug on the other side.

Article name	Special feature	Article N°	Euro CHF
230V connection cable CH		109552	11.-
230V connection cable Schuco		109553	11.-

Aggregate mounting bracket
The Aggregate mounting bracket for installation of standard refrigeration units on a wall or on a cooling device rear panel.

Article name	Special feature	Article N°	Euro CHF
Aggregate mounting bracket		592300	65.-

Stichwort-Verzeichnis

Terms and Conditions

Fundamentals
The below listed conditions apply for all deliveries. These are limited to a minimum, unless written agreements deviating. All specifications and illustrations of the products listed are not binding. In case of alterations to the design and construction modifications, the conditions shall not be valid.

Prices
Prices are including VAT, subject to change ex works, excluding packaging, insurance and other charges (Advance Recycling Fee ARF). Alterations to the VAT rates reserved. Invoices are rounded to a minimal amount of EURO 45 - / CHF 50.
Prices subject to change. The EURO prices apply in WEMO Germany and the CHF prices in WEMO Switzerland.

Order confirmation
The written or telephonic acceptance of orders shall be binding and shall be deemed accepted. We recommend you to order by fax or e-mail.
Merchandise return for unjustified refusal to accept, without signs of wear and in original packaging, within 14 days. 20% of the invoice value will be charged.

Delivery deadlines
The stated delivery times are to be maintained whenever possible, but are not binding. With a possible exceeding of the limits the purchaser is not entitled to cancel the contract or to claim damages.

Part deliveries
Part deliveries are allowed, and shall be an independent business.

Export and documents
The issuance of export documents, declarations of conformity, declarations of origin, supplier declarations reports and device documentation is for a minimum expense, a fee of € 45 / CHF 50.

Benefits and risks
Benefits and risks are fundamentally with the shipping, which is when the goods leave the factory to the buyer.

Retention of title
The delivered goods remain our property until full payment to WEMO.

Payment Terms
Payment shall be made immediately after receipt of a net invoice without deductions. Payments for partial deliveries shall be made in accordance with the invoice. If payment is delayed, the usual interest will be charged. After repeated requests for payment the customer not paying the bill's data is to be disclosed or published, even over the objections of the person concerned. The right to require payment in advance is reserved.

Complaints
Any complaints regarding quality and quantity can only be accepted if made in writing within ten days after the arrival of the consignment. For damages incurred during transit or at destination, no liability assumed. The purchaser shall notify the carrier before delivery of the goods damage or loss, and also make a claim for damages.

Consequential damages
For consequential damages of any kind caused by non-functioning or incorrect application of our products, WEMO cannot be held liable.

Warranty
One year guarantee on materials if used correctly. Due to manufacturing faults or other reasons demonstrably useless goods will be repaired or replaced free of charge provided for prepaid return. Further claims are not recognized. For damage caused by inaccurate information on the application or improper handling of the goods by the purchaser no liability is assumed. For defects that are not known and which only become evident over time, liability is assumed.

Place of performance, place of jurisdiction and applicable law
Place of performance and jurisdiction is Diessenhoffen/Switzerland or Singen / Germany. The legal relationship is subject to Swiss law and also applies for export business.

Mobile cooling
Cooling units for 12 and 24 volt for boat, caravan, solar

Solar cooling units
Cooling equipment for the solar industry and to operate on photovoltaic

Commercial vehicle refrigeration equipment
Refrigeration and stationary air conditioners for the cab

Marine Battery Chargers
Battery chargers and power supplies for the power supply on board

Block cooling units
Standard cooling units for commercial refrigerators and freezers

TransCooler
Transport refrigeration units for commercial transport

Hotel – Mini-bar
Silent refrigerators for hotel, office and bedroom in different versions

Household
No Name cooling devices for the household

Gastro
Gastronomic refrigerated Promo Flyer

Rental refrigerated container
Mobile refrigerated containers in 3 or 6 meters

Mobius
Insulation hoses for pipe insulation - insulation mats
Insulated cooling boxes and memory elements

www.wemo.ch/download

All prices are as follows:
CHF (Swiss francs), including 7,7% VAT, without ARF and without delivery from Schlatt.
Euro including 19% VAT, excluding ARF, without delivery from Gottmadingen.
Prices subject to change. Delivery time according to request.

Issued since 1.2018

WEMO-Geräte AG
Buchbergstrasse 6
CH-8252 Schlatt/TG

Phone +41 52 646 02 20
Fax +41 52 646 02 21

www.wemo.ch
info@wemo.ch

WEMO Kältetechnik GmbH
Bergstrasse 4
D-78244 Gottmadingen-Randegg

Phone +49 7734 971 04
Fax +49 7734 971 05

www.mobilekuehlung.com
info@wemogmbh.de